Installation and service instructions

for contractors

Vitocal 350-A
Type AWHI 351.A
Type AWHO 351.A
Air/water heat pump with electric drive, 400 V~

VITOCAL 350-A

5692878 GB 11/2017

Please keep safe.

Safety instructions

⚠ Please follow these safety instructions closely to prevent accidents and material losses.

Safety instructions explained

⚠ **Danger**
This symbol warns against the risk of injury.

! **Please note**
This symbol warns against the risk of material losses and environmental pollution.

Note
Details identified by the word "Note" contain additional information.

Target group

These instructions are exclusively intended for authorised contractors.

- Work on the refrigerant circuit may only be carried out by authorised refrigeration engineers.
- Work on electrical equipment must only be carried out by a qualified electrician.
- The system must be commissioned by the system installer or a qualified person authorised by the installer.

Regulations to be observed

- National installation regulations
- Statutory regulations for the prevention of accidents
- Statutory regulations for the protection of the environment
- Codes of Practice of the relevant trade associations
- All relevant safety regulations as defined by DIN, EN, DVGW, VDE and locally applicable standards
  (A) ÖNORM, EN and ÖVE
  (CH) SEV, SUVA, SVTI, SWKI and SVGW

Safety instructions for working on the system

Working on the system

- Isolate the system from the power supply, e.g. by removing the separate fuse or by means of a mains isolator, and check that it is no longer live.
  Note
  In addition to the control circuit there may be several power circuits.
  ⚠ **Danger**
  Contact with live components can result in severe injuries. Some components on PCBs remain live even after the power supply has been switched off.
  Prior to removing covers from the appliances, wait at least 4 minutes until the voltage has completely dropped out.
- Safeguard the system against reconnection.
- Wear suitable personal protective equipment when carrying out any work.

⚠ **Danger**
Hot surfaces can cause burns.
- Before maintenance and service work, switch OFF the appliance and let it cool down.
- Never touch hot surfaces on the appliance, fittings or pipework.

! **Please note**
Electronic assemblies can be damaged by electrostatic discharge.
Prior to commencing work, touch earthed objects such as heating or water pipes to discharge static loads.

Repair work

! **Please note**
Repairing components that fulfil a safety function can compromise the safe operation of the system.
Replace faulty components only with genuine Viessmann spare parts.

5692878

Safety instructions (cont.)

Auxiliary components, spare and wearing parts

!

Please note
Spare and wearing parts that have not been tested together with the system can compromise its function. Installing non-authorised components and making non-approved modifications or conversions can compromise safety and may invalidate our warranty.
For replacements, use only original spare parts supplied or approved by Viessmann.

Index

1. Information

Disposal of packaging 6
Symbols 6
Intended use 6
Product information 7

2. Preparing for installation

General information on the electrical connection 8
Internal heat pump 8
- Installation room requirements 8
- Positioning 9
- Connections 12

External heat pump 13
- Installation requirements 13
- Positioning 14
- Connections 17

3. Installation sequence

Removing the transport brackets 21
Type AWHI 351.A only: Fitting the supplied floor mat 22
Fitting the outer panels 23
Type AWHO 351.A only: Fitting the silencer hoods 28
Fitting the top panel 29
Siting the heat pump 29
- Connecting the air circuit (primary circuit) (only for type AWHI 351.A) 29
- Levelling the heat pump 29

Hydraulic connections 31
- Type AWHI 351.A 32
- Type AWHO 351.A 33

Control panel electrical connections 34
- Opening the control panel 34
- Overview of electrical connections in the control panel 35
- Routing cables/leads to the control panel 36
- Attaching the connecting cables from the control unit in the control panel 38

Heat pump control unit electrical connections 39
- Fitting the heat pump control unit and inserting cables 39
- Attaching cables from the control panel in the control unit 43
- Adapting the heat pump control unit 43
- Inserting the coding card 45
- Overview of electrical connections 46
- Main PCB (operational components 230 V~) 47
- Expansion PCB on main PCB (operational components 230 V~) 49
- Cross connect PCB 52
- Controller and sensor PCB (sensors) 54

Power supply 58
- Heat pump control unit power supply 230 V~ 59
- Compressor power supply (400 V~), sealing economy tariff connection for compressor 59
- Power supply with power-OFF 60
- Phase monitor (if installed) 62

Closing the heat pump 64
- Closing the control panel 65
- Fitting the front panel 66

4. Commissioning, inspection, maintenance

Steps - commissioning, inspection and maintenance 67

5. Troubleshooting

Repairs 80
- Overview of sensors, drain and air vent valves 80
- Draining the heat pump on the secondary side 80
- Checking the sensors 80
- Check fuses 81

5692878

Index (cont.)

6. Parts list type AWHI 351.A

Overview of assemblies 83
Casing 84
- Front panels 84
- Side panels 86
- Miscellaneous 88

Air module 90
Heat pump control unit 92
Electrical equipment 94
- Type AWHI 351.A10 and AWHI 351.A14 94
- Type AWHI 351.A20 96

Heat pump module 98
Base frame 102

7. Parts list type AWHO 351.A

Overview of assemblies 105
Casing 106
- Front panels 106
- Side panels 108
- Silencer hood 110
- Miscellaneous 112

Air module 114
Heat pump control unit 116
Electrical equipment 118
- Type AWHO 351.A10 and AWHO 351.A14 118
- Type AWHO 351.A20 120

Heat pump module 122
Base frame 126

8. Commissioning/service reports

Hydraulic parameter report 128
Control parameter report 128

9. Specification

Specification 132
Sound transmission data 135

10. Appendix

Heat pump commissioning order 136

11. Certificates

Declaration of conformity 137

12. Keyword index

..... 138

5692878

Disposal of packaging

Please dispose of packaging waste in line with statutory regulations.

DE: Use the disposal system organised by Viessmann.
AT: Use the ARA statutory disposal system (Altstoff Recycling Austria AG, licence number 5766).
CH: Packaging waste is disposed of by the HVAC contractor.

Symbols

Symbol	Meaning
	Reference to other document containing further information
1.	Step in a diagram: The numbers correspond to the order in which the steps are carried out.
!	Warning of material losses and environmental pollution
	Live electrical area
	Pay particular attention.
	▪ Component must audibly click into place. or ▪ Acoustic signal
	▪ Fit new component. or ▪ In conjunction with a tool: Clean the surface.
	Dispose of component correctly.
	Dispose of component at a suitable collection point. Do **not** dispose of component in domestic waste.

The steps in connection with commissioning, inspection and maintenance are found in the "Commissioning, inspection and maintenance" section and identified as follows:

Symbol	Meaning
	Steps required during commissioning
	Not required during commissioning
	Steps required during inspection
	Not required during inspection
	Steps required during maintenance
	Not required during maintenance

Intended use

The appliance is only intended to be installed and operated in sealed unvented heating systems that comply with EN 12828, with due attention paid to the associated installation, service and operating instructions.

Depending on the version, the appliance can only be used for the following purposes:
- Central heating
- Central cooling
- DHW heating

Intended use (cont.)

The range of functions can be extended with additional components and accessories.

Intended use presupposes that a fixed installation in conjunction with permissible, system-specific components has been carried out.

Commercial or industrial usage for a purpose other than central heating/cooling or DHW heating shall be deemed inappropriate.

Incorrect usage or operation of the appliance (e.g. the appliance being opened by the system user) is prohibited and will result in an exclusion of liability. Incorrect usage also occurs if the components in the heating system are modified from their intended function.

Note
The appliance is intended exclusively for domestic or semi-domestic use, i.e. even users who have not had any instruction are able to operate the appliance safely.

Product information

Layout

The Vitocal 350-A is an air source heat pump with output-dependent control.
Type AWHI 351.A is installed inside the building. Air drawn in is supplied to the heat pump via an air duct. Expelled air similarly leaves the building via an air duct.
Type AWHO 351.A is installed outside the building. The hydraulic connection lines are routed below ground and must be frost-proof.

Hydraulics

To supply the secondary circuit, either two circulation pumps (secondary pump and circulation pump for cylinder heating) or 1 secondary pump and a 3-way diverter valve are connected.
On type AWHI, the secondary pump can be built into the heat pump. The remaining components are installed outside the appliance.
On type AWHO, the hydraulic components for supplying the secondary circuit are installed outside the heat pump.

Central heating

The heat pump is able to supply up to 3 heating circuits: 1 heating circuit without mixer and 2 heating circuits with mixer. The mixer extension kit (accessories) is required to control the mixer for the second heating circuit with mixer.

Central cooling

Central cooling results either through a heating/cooling circuit or via a separate cooling circuit. For this, the refrigerant circuit is reversed and heat is extracted from the cooling circuit.

Heat pump control unit

The entire heating system is monitored and controlled by the integral Vitotronic 200, type WO1B heat pump control unit.

System examples

For available system examples, see **www.viessmann-schemes.com**

General information on the electrical connection

- **Connecting control panel cables – heat pump control unit:**
  Observe information from page 34.
- **Electrical connection of system components** (pumps, mixers, valves, message facilities, contactors, function extensions, sensors etc.):
  Connections are made in the heat pump control unit. Observe information from page 39.
- **Power supply:**
  The number of power cables from the distribution board (meter box) to the heat pump control unit and the control panel depends on the system version and tariffs used.
  Connections are made in the heat pump control panel. Observe information from page 58.

Internal heat pump

Installation room requirements

! **Please note**
Incorrect ambient conditions can result in system damage and can put safe operation at risk.
- The installation room must be dry and free from the risk of frost.
  Ensure ambient temperatures are above 0 °C and below 35 °C.
- Prevent air contamination by halogenated hydrocarbons (e.g. as contained in paints, solvents or cleaning fluids) and excessive dust (e.g. through grinding/polishing work).
- Prevent consistently high humidity levels (e.g. caused by continuous drying of washing).

! **Please note**
Overloading the floor can result in building damage.
Observe the permissible floor load.

- Total weight:

AWHI 351.A10	287 kg
AWHI 351.A14	297 kg
AWHI 351.A20	361 kg

- To prevent the transmission of structure-borne noise, never site the appliance on ceilings with wooden joists (e.g. in the attic).
- Observe required minimum clearances.
- Level the appliance horizontally.
- Min. required room height 2.10 m
- Observe the necessary minimum room volume to EN 378:

AWHI 351.A10	13.55 m^3
AWHI 351.A14	16.13 m^3
AWHI 351.A20	17.10 m^3

Note
During defrosting, cool vapour escapes from the air duct on the discharge side. This must be taken into consideration during installation (choosing the installation room, determining the intake and discharge side).

Internal heat pump (cont.)

Positioning

Minimum clearances and dimensions when positioning in a corner

Note
Before making the wall openings, check the structural analysis of the building and the wall. If necessary, fit a support.
For corner installation (l.h. or r.h. discharge), the wall outlets are the same size.

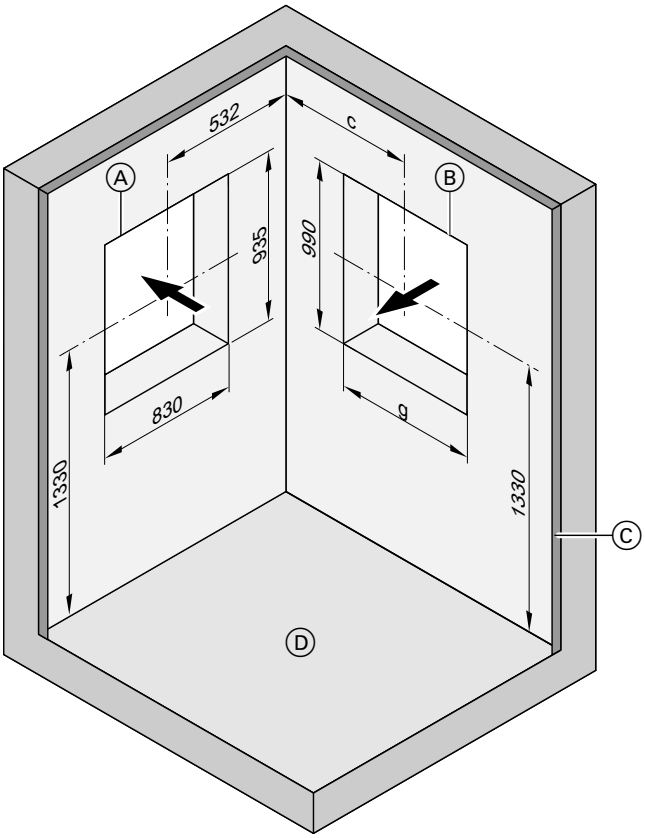

Fig. 1

Ⓐ Wall duct, discharge side
Ⓑ Wall duct, intake side
Ⓒ Plaster finish
Ⓓ Top edge, finished floor

Internal heat pump (cont.)

Discharge side on the left

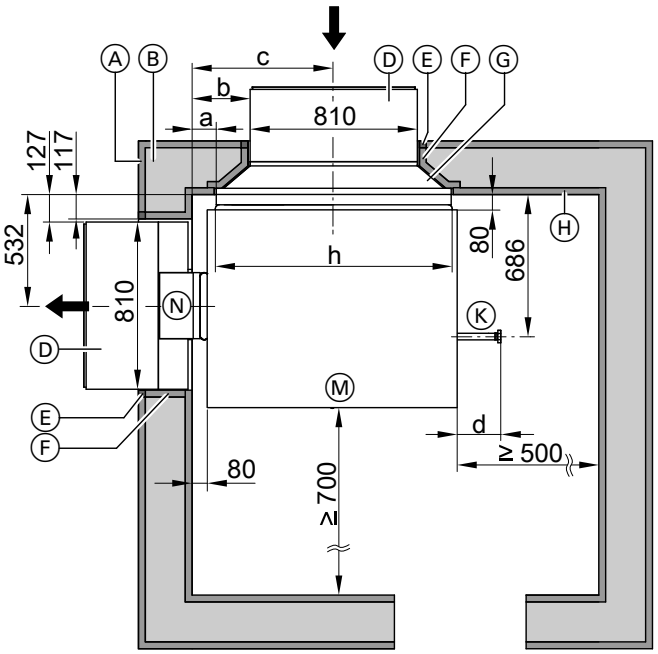

Discharge side on the right

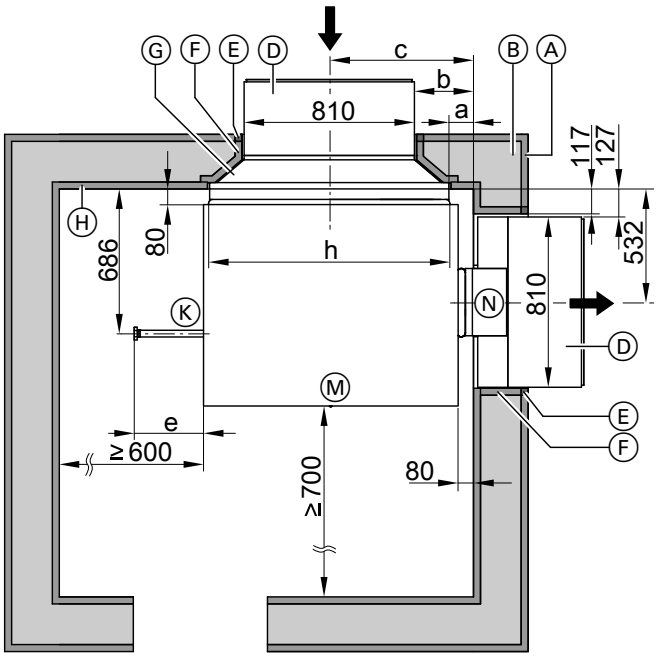

Ⓐ Exterior rendering
Ⓑ Wall
Ⓓ Wall duct (EPP, can be trimmed to the correct size from the outside with a saw. Observe plaster thickness)
Ⓔ Compression sealing tape and acrylic airtight seam (all-round)
Ⓕ PU foam (all-round)
Ⓖ Appliance connector, air duct, intake side (EPP)
Ⓗ Plaster finish/wall coating
Ⓚ Hydraulic and condensate connections
Ⓜ Heat pump
Ⓝ Appliance connector, air duct on the discharge side (EPP)

Dimension		Vitocal 350-A, type AWHI		
		351.A10	351.A14	351.A20
a	mm	95	85	107
b	mm	118	182	284
c	mm	522	588	689
d	mm	367	217	64
e	mm	489	489	472
g	mm	880	1020	1180
h	mm	845	995	1148

Note
*Observe the **minimum room height** of 2100 mm.*

Minimum clearances and dimensions for wall installation

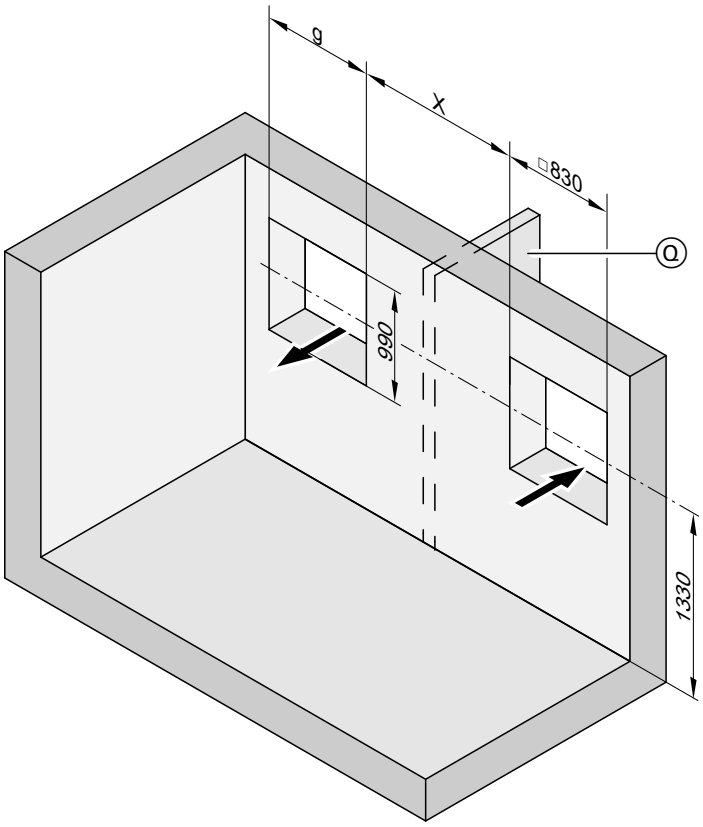

*Fig. 2 Dimension **g**: See page 10.*

Ⓠ Partition wall (if required): See the following table.
X Distance between wall openings inside the building

5692878

Internal heat pump (cont.)

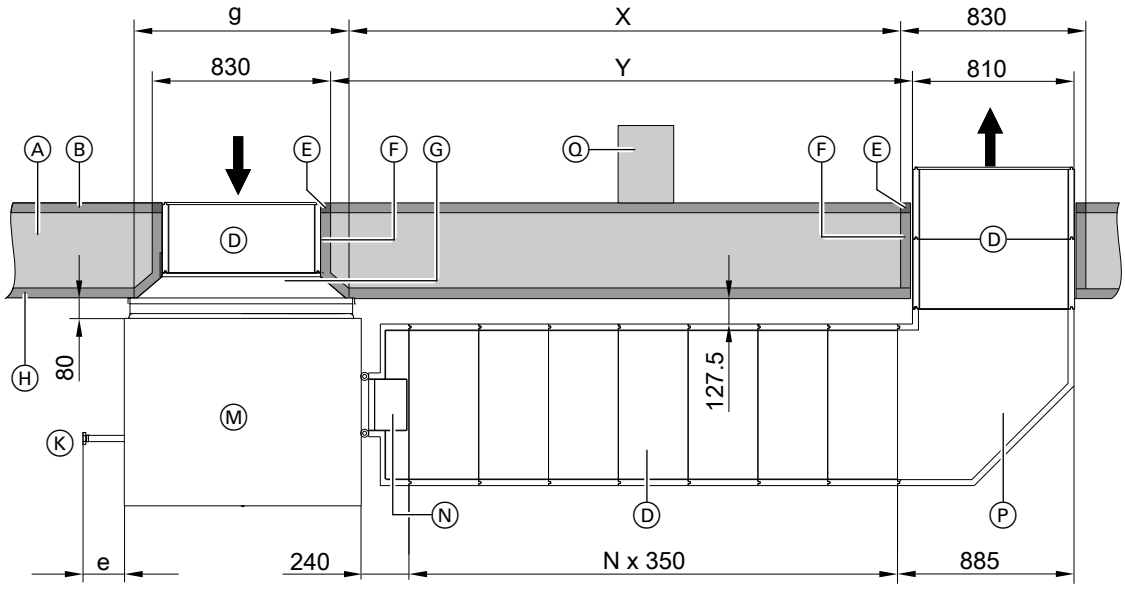

*Fig. 3 Dimensions **e** and **g**: See page 10.*

- Ⓐ Exterior rendering
- Ⓑ Wall
- Ⓓ Wall duct (EPP, can be trimmed to the correct size from the outside with a saw. Observe plaster thickness)
- Ⓔ Compression sealing tape and acrylic airtight seam (all-round)
- Ⓕ PU foam (all-round)
- Ⓖ Appliance connector, air duct, intake side (EPP)
- Ⓗ Plaster finish/wall coating
- Ⓚ Hydraulic and condensate connections
- Ⓜ Heat pump
- Ⓝ Appliance connector, air duct on the discharge side (EPP)
- Ⓟ Air duct 90° bend
- Ⓠ Partition wall (if required): See the following table.
- N Number of duct parts (wall ducts)
- X Distance between wall openings inside the building
- Y Distance between wall openings outside the building

Distances between wall openings X and Y in mm

N	Vitocal 350-A, type AWHI						Partition wall Ⓝ required
	351.A10		351.A14		351.A20		
	X	Y	X	Y	X	Y	
1	655	680	660	755	665	840	Yes
2	1005	1030	1010	1105	1015	1190	Yes
3	1355	1380	1360	1455	1365	1540	Yes
4	1705	1730	1710	1805	1715	1890	Yes
5	2055	2080	2060	2155	2065	2240	Yes
6	2405	2430	2410	2505	2415	2590	Yes
7	2755	2780	2760	2855	2765	2940	Yes
8	3105	3130	3110	3205	3115	3290	No
9	3455	3480	3460	3555	3465	3640	No
10	3805	3830	3810	3905	3815	3990	No

Internal heat pump (cont.)

Connections

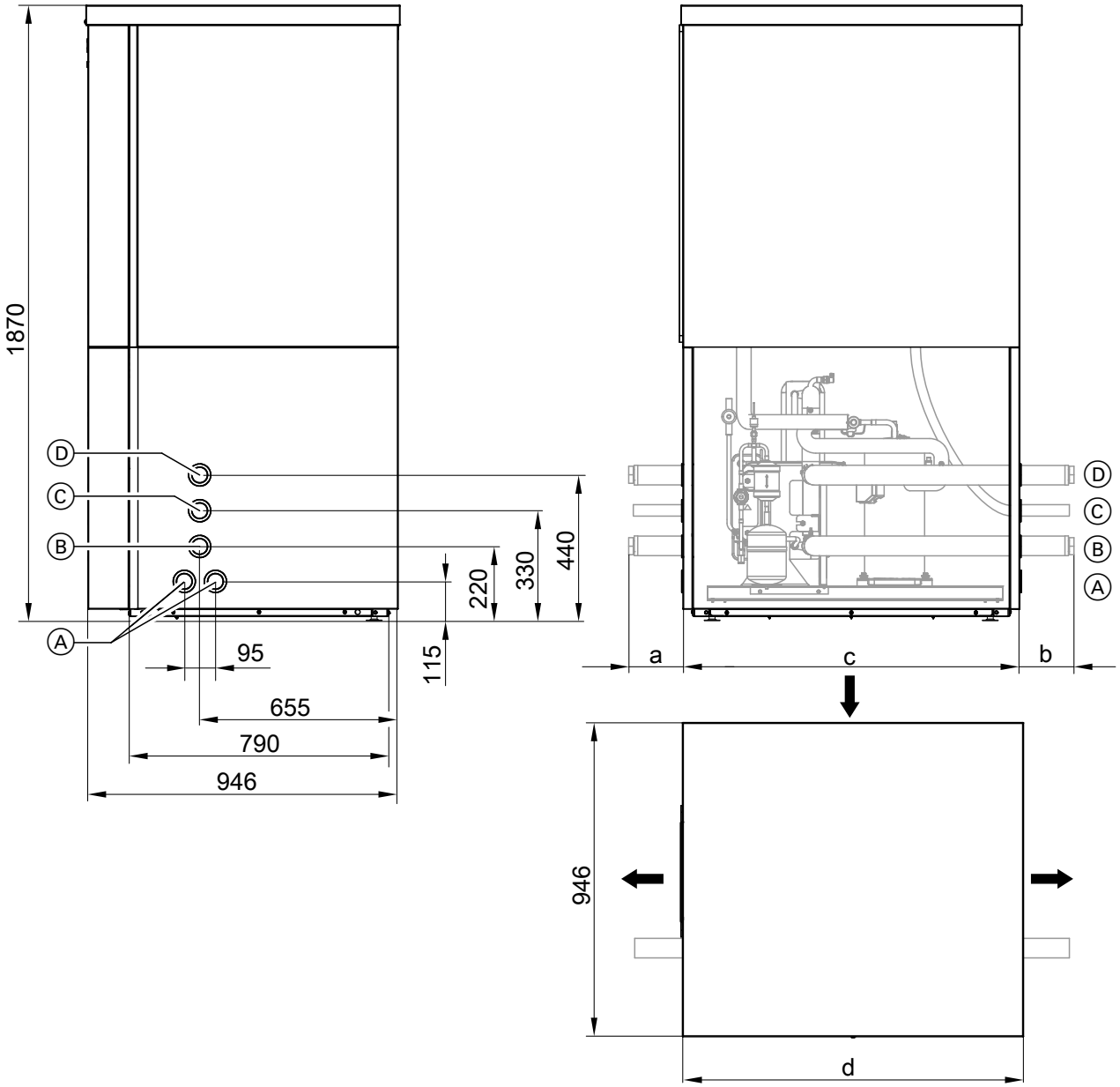

Fig. 4 Dimensions excluding casing panels: 790 mm x c

Ⓐ Cable entries
Ⓑ Heating water return/DHW cylinder return G 1½ (female thread)
Ⓒ Condensate drain
Ⓓ Heating water flow/DHW cylinder flow G 1½ (female thread)

Notes

- *Air discharge, optionally l.h.* ***or*** *r.h. side*
- *Hydraulic lines and condensate drain can be routed from the heat pump from the left* ***or*** *right. They are always installed opposite the air discharge.*
- *The connecting hoses can be shortened. The stated dimensions a and b are for hose lengths in delivered condition.*

Dimensions in mm

Type	a	b	c	d
AWHI 351.A10	489	367	880	891
AWHI 351.A14	489	217	1030	1041
AWHI 351.A20	472	64	1200	1211

5692878

Internal heat pump (cont.)

Cables/leads

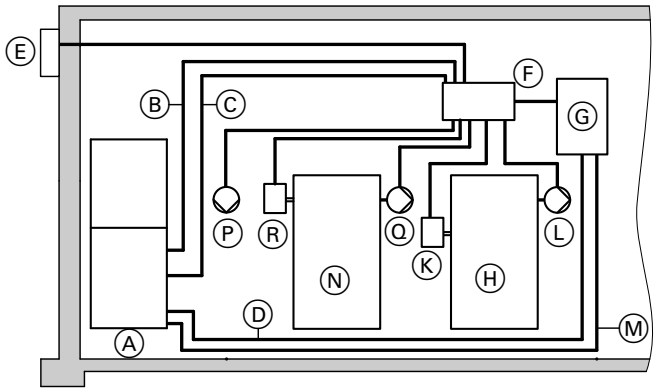

Fig. 5

Ⓐ Heat pump
Ⓑ LV lead, pre-manufactured
Ⓒ Control cable, pre-manufactured
Ⓓ Flexible power cable (special tariff/load current): According to compressor output, cable length and routing, e.g. 5 x 2.5 mm^2.
Ⓔ Outside temperature sensor, sensor lead: 2 x 0.75 mm^2
Ⓕ Control unit, flexible power cable: 5 x 1.5 mm^2 with power-OFF contact power cable, floating
Ⓖ Electricity meter/mains
Ⓗ DHW cylinder
Ⓚ Cylinder temperature sensor, sensor lead: 2 x 0.75 mm^2
Ⓛ DHW circulation pump, power cable: 3 x 1.5 mm^2
Ⓜ Flexible power cable for instantaneous heating water heater (accessories):
400 V: 5 x 2.5 mm^2
230 V: 7 x 2.5 mm^2
Ⓝ Heating water buffer cylinder
Ⓟ Secondary pump, power cable: 3 x 1.5 mm^2
Ⓠ Heating circuit pump
Ⓡ Buffer temperature sensor, sensor lead: 2 x 0.75 mm^2

Required cable/lead lengths:

- For the heat pump control unit (wall outlet centrally directly below the heat pump control unit): 0.6 m from wall outlet
- Inside the heat pump (to the control panel): 3.4 m plus wall clearance

External heat pump

Installation requirements

- Provide a manual drain for the heating water flow and return lines in any area at risk from frost.
  If the heat pump control unit and heating circuit pump are ready for operation, the frost protection function of the heat pump control unit is enabled.
  Drain the system if the heat pump is shut down or there is a prolonged power failure.
  On heat pump systems where a power failure cannot be recognised (holiday home), operate the heating circuit with a suitable antifreeze or drain it.
- To prevent "air short circuits" and an increase in noise level due to reflection, avoid siting equipment in recesses, at building corners or between 2 walls. Lawn areas and vegetation can reduce noise generation.
  Therefore, **only** the heat pump foundations should be made from reverberant material (concrete).
- Never install the heat pump next to living rooms or bedrooms.
- The air in the discharge area is approx. 10 K colder than the ambient air. Therefore, black ice could develop in the discharge area even at [ambient] temperatures above freezing. A clearance of ≥ 3 m must be observed to pavements or patios.

Note
During defrosting, cool vapour escapes from the heat pump air discharge vents. This vapour build-up must be taken into consideration during installation (choosing the installation location, orientation of the heat pump).

External heat pump (cont.)

Positioning

Minimum clearances

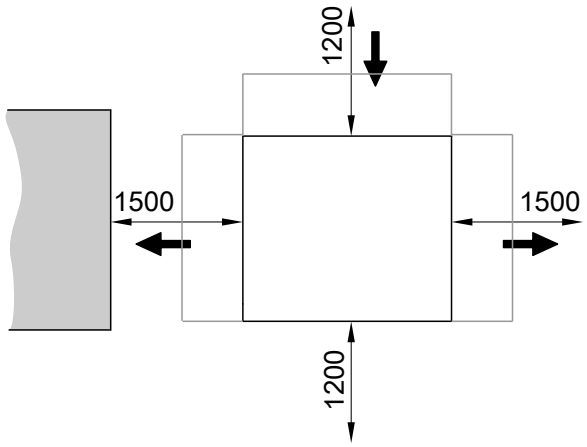

Fig. 6

Foundations

Site the heat pump horizontally on a permanently solid surface. We recommend laying concrete foundations as shown in the following diagrams.

- Provide an adequately sized recess (see diagram below) in the foundations to permit the lines (heating water flow and return, cables and condensate drain) to be brought into the heat pump from below.
- Design the foundations, supporting surface and cable ducts so that small animals cannot get into the heat pump or cable ducts.
- Drain all condensate derived from the air (subject to temperature and relative humidity up to 20 l/h) via a DN 40 drain pipe, which should be protected from frost and provide a steady fall.
  If possible connect the condensate drain to a drainage or sewer system. In this case, provide a siphon with a backup level of at least 60 mm in the frost-protected area.
  Where the ground is able to absorb water, the condensate can be soaked away down to a frost-free depth into a gravel bed.
- Where appropriate, provide thermal insulation or a ribbon heater around the condensate drain hose on site.

Technical guide

Vitocal 350-A, type	Weight (with silencer hoods)
AWHO 351.A10	325 kg
AWHO 351.A14	335 kg
AWHO 351.A20	400 kg

External heat pump (cont.)

Foundation dimensions: Plan view

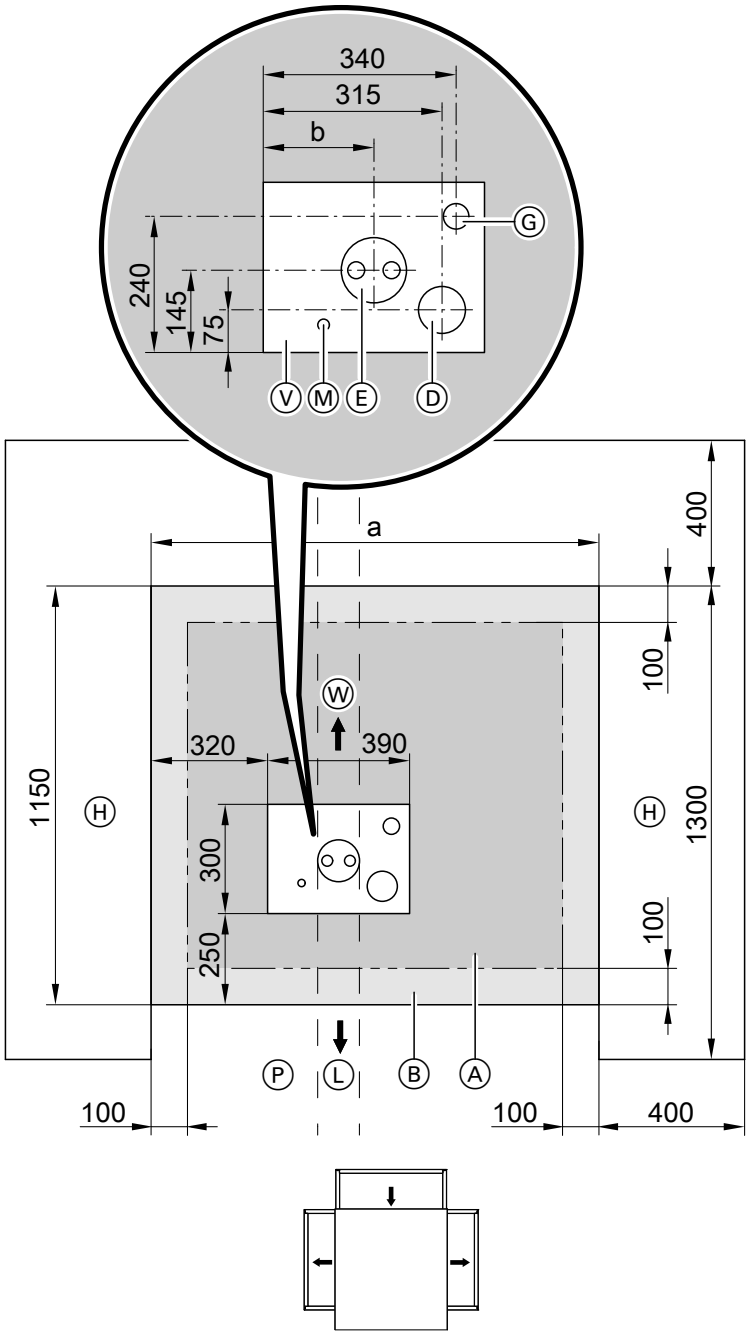

Fig. 7

Ⓐ Heat pump
Ⓑ Concrete foundation (300 mm thick) consisting of:
- Concrete slab C25/30, BSt 500 S and M
- Reinforcement with all-round Q 257 A wire mesh

Ⓓ KG conduit DN 100 for connecting cables to the heat pump control unit (on site):
Control cable 230 V~, LV lead < 42 V
Ⓔ Hydraulic connection set (accessories): Hydraulic connection lines for heating water flow and heating water return
Ⓖ Condensate drain DN 40 (on site)
Ⓗ Soft ground, gravel or crushed stone
Ⓛ Upstream direction of pipe from hydraulic connection set
Ⓜ Heat pump power cable
Ⓟ Underground channel
Ⓥ Recess in the foundations for routing the lines for heating water flow and return, the condensate drain and the connecting cables (low voltage and control cables) as well as the power cable to the control panel
Ⓦ Downstream direction of pipe from hydraulic connection set

External heat pump (cont.)

Dimension		Vitocal 350-A, type AWHO		
		351.A10	351.A14	351.A20
a	mm	1080	1230	1400
b	mm	195	195	195

Connection dimensions for hydraulic connection set on foundations: Cross-section

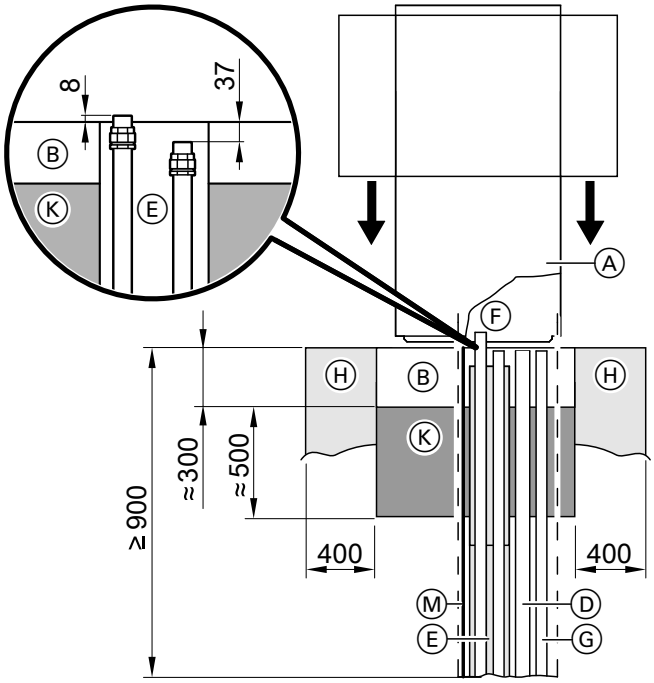

Fig. 8

Ⓐ Heat pump
Ⓑ Concrete foundation (300 mm thick) consisting of:
- Concrete slab C25/30, BSt 500 S and M
- Reinforcement with all-round Q 257 A wire mesh

Ⓓ KG conduit DN 100 for connecting cables to the heat pump control unit (on site):
Control cable 230 V~, LV lead < 42 V
Ⓔ Hydraulic connection set (accessories): Hydraulic connection lines for heating water flow and heating water return
Ⓖ Condensate drain DN 40 (on site)
Ⓗ Soft ground, gravel or crushed stone
Ⓚ Frost protection (compacted crushed stone, e.g. 0 to 32/56 mm); thickness of layer subject to local requirements and building regulations
Ⓜ Heat pump power cable

Note
- *Before laying the concrete foundations, trim the hydraulic connection pipes (heating water flow and return), install the connection fittings and provide frost protection.*
- *The power cable may be routed freely up through the foundation opening. What is important is spatial separation between LV lead and control cable.*

External heat pump (cont.)

Connections

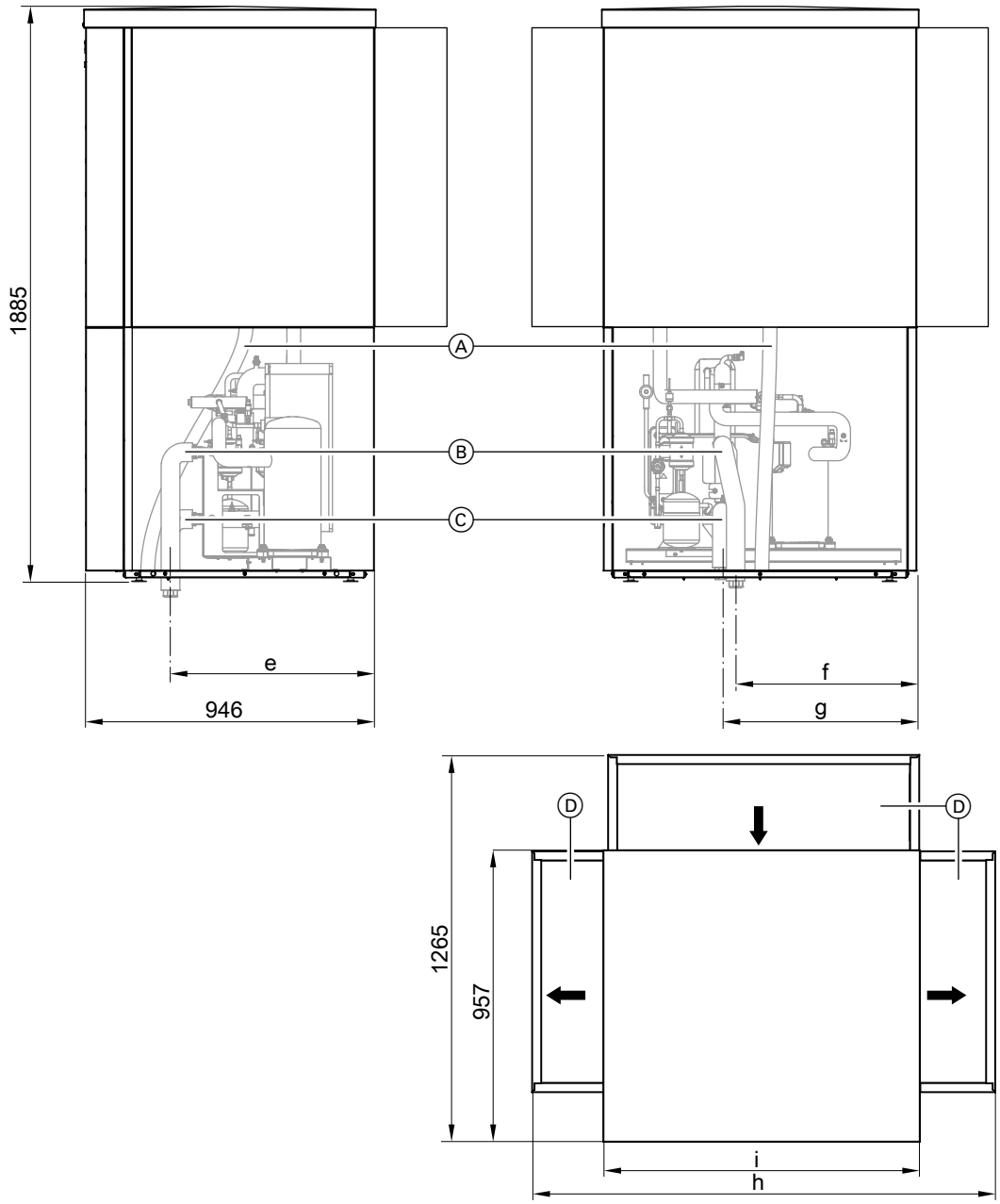

Fig. 9

Ⓐ Condensate drain
Ⓑ Heating water flow G 1¼ (female thread): Adaptor G 1¼ to Rp 1 supplied
Ⓒ Heating water return G 1¼ (female thread): Adaptor G 1¼ to Rp 1 supplied
Ⓓ Silencer hoods

Dimensions in mm

Type	e	f	g	h	i
AWHO 351.A10	655	456	500	1380	891
AWHO 351.A14	655	606	650	1530	1041
AWHO 351.A20	655	754	798	1700	1211

External heat pump (cont.)

Cables/leads and hydraulic lines

Laying the lines underground and routing in through the exterior wall

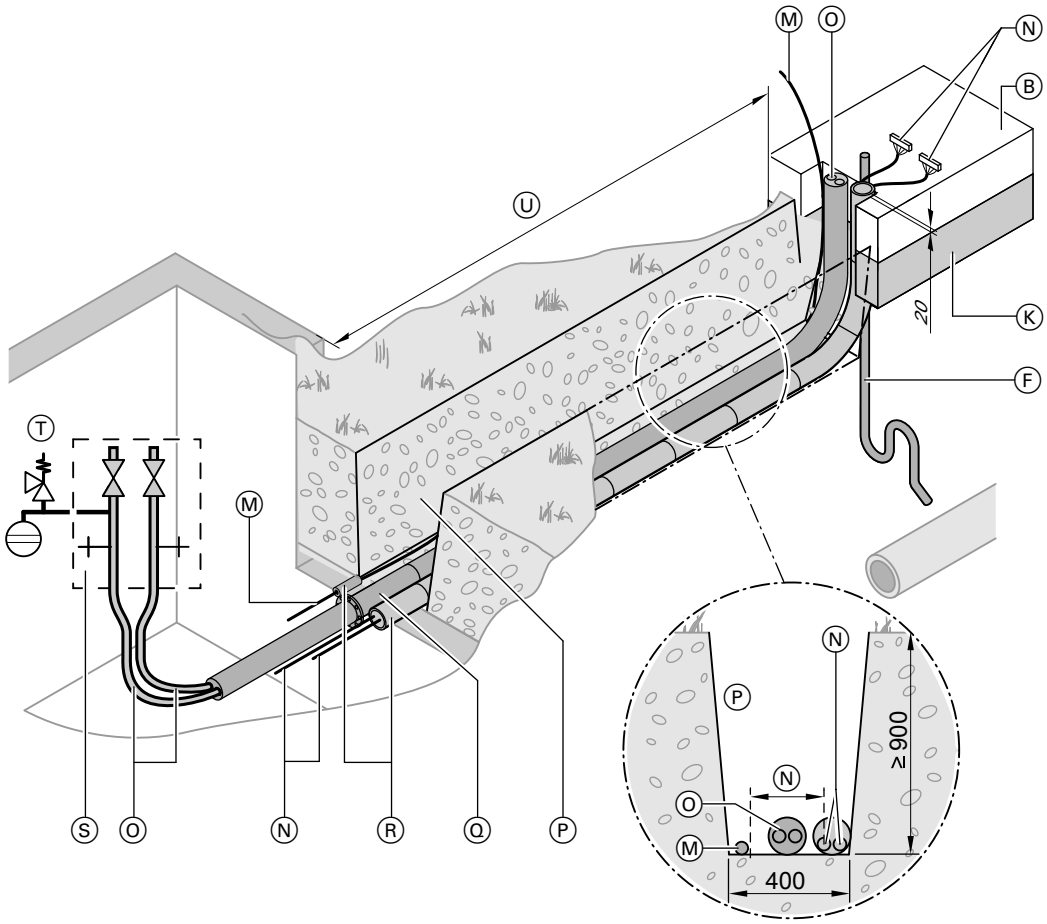

Fig. 10

Ⓑ Concrete foundation (300 mm thick) consisting of:
- Concrete slab C25/30, BSt 500 S and M
- Reinforcement with all-round Q 257 A wire mesh

Ⓒ KG conduit DN 100 for power cable (on site)

Ⓓ KG conduit DN 100 for connecting cables to the heat pump control unit (on site):
Control cable 230 V~, LV lead < 42 V

Ⓔ Hydraulic connection set (accessories): Connection lines for heating water flow and heating water return

Ⓕ Condensate drain DN 40 (on site)

Ⓚ Frost protection (compacted crushed stone, e.g. 0 to 32/56 mm); thickness of layer subject to local requirements and building regulations

Ⓜ Flexible power cable to compressor/fan (on site)

Ⓝ 2 connecting cables inside DN 100 KG conduit (on site), fully wired (5, 15 or 30 m):
- **Control cable** 230 V~
- **LV lead** < 42 V

  Note
  The maximum lead length is 30 m. Extensions are not permissible.

Ⓞ Hydraulic connection lines (heating water flow and heating water return)

Ⓟ Underground channel

Ⓠ Wall duct with expanding mortar (on site) for hydraulic connection line

Ⓡ Moisture-proof and waterproof wall ducts (on site)

Ⓢ Drain & fill facility with shut-off valve (for draining with compressed air)

Ⓣ Expansion vessel with safety assembly (accessories)

Ⓤ Clearance, house wall — foundations:
- Max. clearance depends on length of connecting cables and hydraulic connection lines:
  Max. 23 m
- Maintain the minimum clearance to other objects (> 1.5 m) when siting.

Heating water connection (hydraulic connection lines Ⓞ)

Use the hydraulic connection set (accessory). The connection set is fully prepared in different lengths. The flow and return lines are flexible and have 2 adaptors each. The lines are located inside a common thermal insulation.

5692878

External heat pump (cont.)

Vitocal 350-A, type AWHO 351.A20
- Flow/return lines: 2 x DN 40
- Adaptors: DN 40 to R 1¼

- Lines are fed into building Ⓠ through a wall duct with expanding mortar (on site).
- Provide a drain & fill facility Ⓢ for heating water flow and return in the building near an external wall and 0.8 m below ground level.
  Note
  In buildings at ground level, provide a thermally insulated duct or enable draining of the heat pump with compressed air.

Frost protection

If the heat pump control unit and heating circuit pump are ready for operation, the frost protection function of the heat pump control unit is enabled. Drain the system via the drain & fill facility Ⓢ when the heat pump is taken out of use or if the power fails for a long period.
In heat pump systems where a power failure would not be detected (holiday home), the heating circuits can be operated with suitable antifreeze. To ensure trouble-free heat pump operation, use antifreeze based on glycol. Ready-mixed solutions ensure an even distribution of concentrate.
Recommendation: Use Viessmann "Tyfocor" heat transfer medium which is based on ethylene glycol (ready-mixed down to −19 °C, light green).

Power cable Ⓜ

Observe the technical connection requirements imposed by your local power supply utility.
- Run the power cable to control panel Ⓜ outside the building as an SWA cable (NYY) or route an NYM cable inside a KG conduit.
- Cable length required in the heat pump from top edge of foundation: Min. 2.6 m.

Connecting cables Ⓝ

Route prepared connecting cables (control cable 230 V~, LV lead < 42 V) Ⓝ outside the building in a KG conduit DN 100. Protect the plugs at the ends of the cables from dirt and damage (e.g. with bubble wrap).

Cable length required in the heat pump from top edge of foundation
- Control cable 230 V~: Min. 0.9 m
- LV lead < 42 V: Min. 0.7 m

Routing KG conduits Ⓒ, Ⓓ

- Provide a wire pull for the cables (Ⓜ, Ⓝ).
- To facilitate the routing of cables D through the KG conduit, avoid 90° bends; instead use 3 x 30° or 2 x 45°.
- Route the KG conduit with a slope towards the heat pump and fit a condensate drain if required.
- Ensure that wall ducts Ⓡ are moisture-proof and waterproof.
- Seal the apertures of the KG conduit so that no animals or moisture can enter the building.

External heat pump (cont.)

Wiring diagram

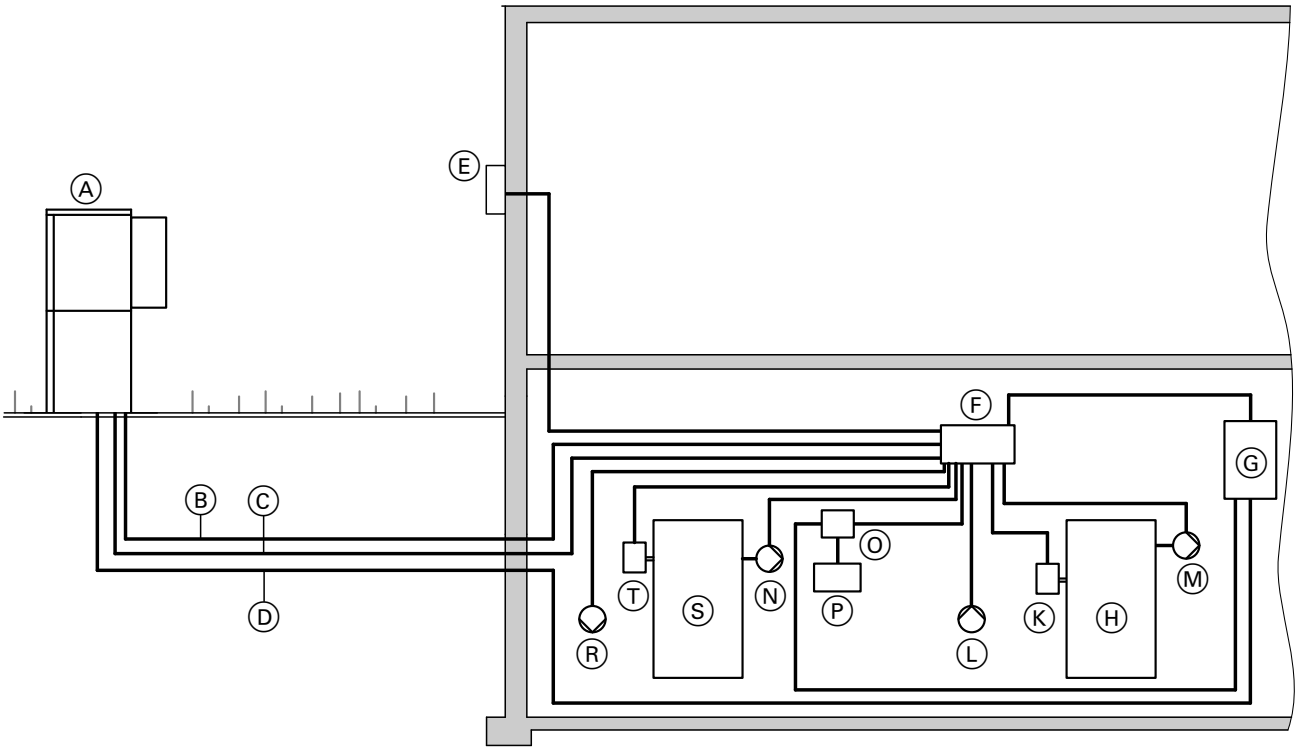

Fig. 11 Standard system example

Ⓐ Heat pump
Ⓑ LV lead, pre-manufactured
Ⓒ Control cable, pre-manufactured
Ⓓ Flexible power cable for special tariff/load current: According to compressor output, cable length and routing, e.g. 5 x 2.5 mm²
Ⓔ Outside temperature sensor, sensor lead (2 x 0.75 mm²)
Ⓕ Control unit, flexible power cable (5 x 1.5 mm²) with power-OFF contact power cable, floating
Ⓖ Electricity meter/mains
Ⓗ DHW cylinder
Ⓚ Cylinder temperature sensor, sensor lead (2 x 0.75 mm²)
Ⓛ Circulation pump for cylinder heating or 3-way diverter valve, power cable (3 x 1.5 mm²)
Ⓜ DHW circulation pump, power cable (3 x 1.5 mm²)
Ⓝ Heating circuit pump, power cable (3 x 1.5 mm²)
Ⓞ Power cable for instantaneous heating water heater switching module
400 V: 5 x 2.5 mm²
230 V: 7 x 2.5 mm²
Ⓟ Instantaneous heating water heater (accessories)
Ⓡ Secondary pump, power cable (3 x 1.5 mm²)
Ⓢ Heating water buffer cylinder
Ⓣ Cylinder temperature sensor, sensor lead (2 x 0.75 mm²)

Required cable/lead lengths:

- For the heat pump control unit (wall outlet centrally directly below the heat pump control unit): 0.6 m from the wall outlet
- Inside the heat pump (to the control panel): 2.6 m from the top edge of the foundations

Note

If additional heating circuits with mixer, external heat generators (gas/oil/wood), remote control, etc. are being installed, the additionally required supply and control cables and sensor leads must be factored in.

5692878

Removing the transport brackets

! **Please note**
Prevent damage to the appliance during handling.
Never apply loads/weight to the top, front or side panels of the appliance.

! **Please note**
Steep tilting of the compressor in the heat pump can result in appliance damage.
Max. tilting angle: 45° for a very short time

! **Please note**
If transport brackets are not removed, they cause vibrations and excessive noise.
Remove the transport brackets and replace the screws.

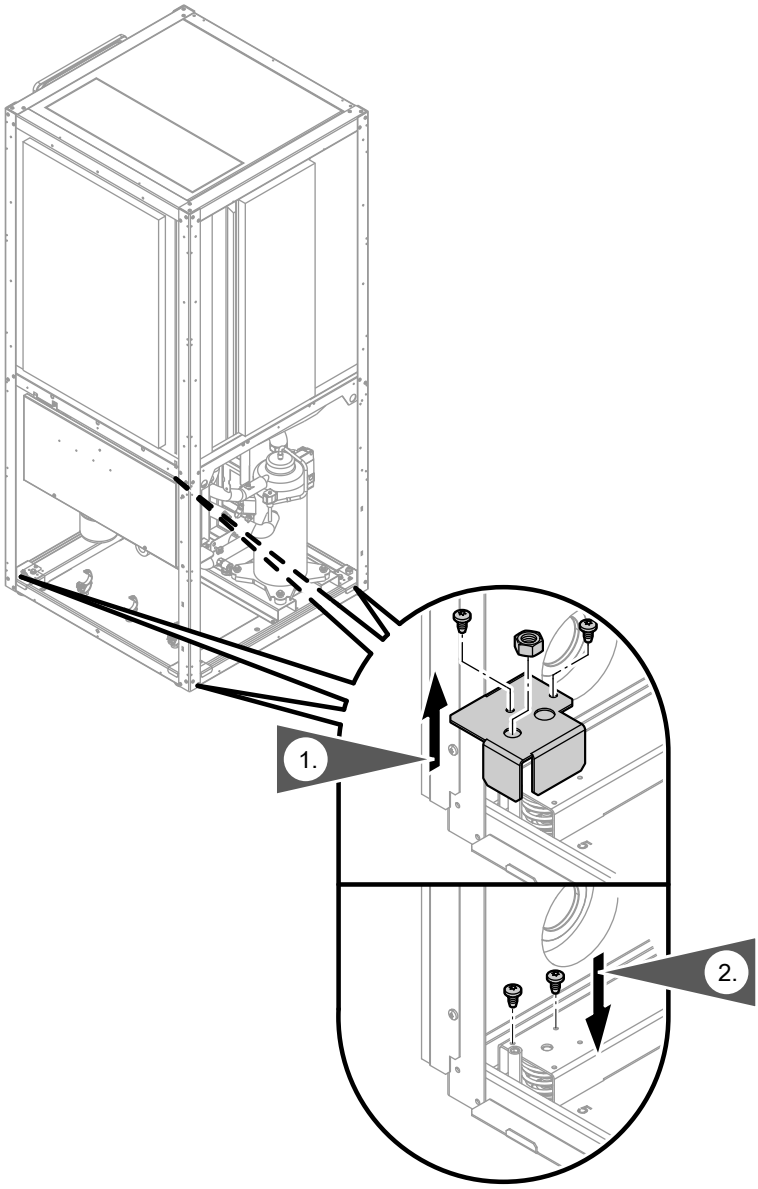

Fig. 12

Type AWHI 351.A only: Fitting the supplied floor mat

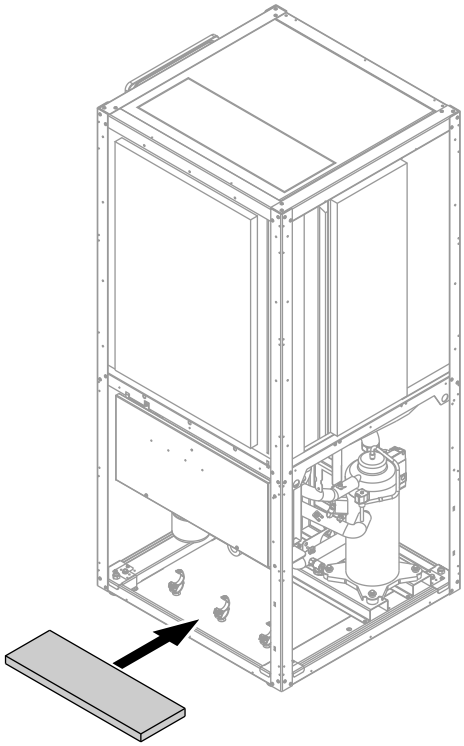

Fig. 13

Fitting the outer panels

Installation using type AWHI 351.A as an example.

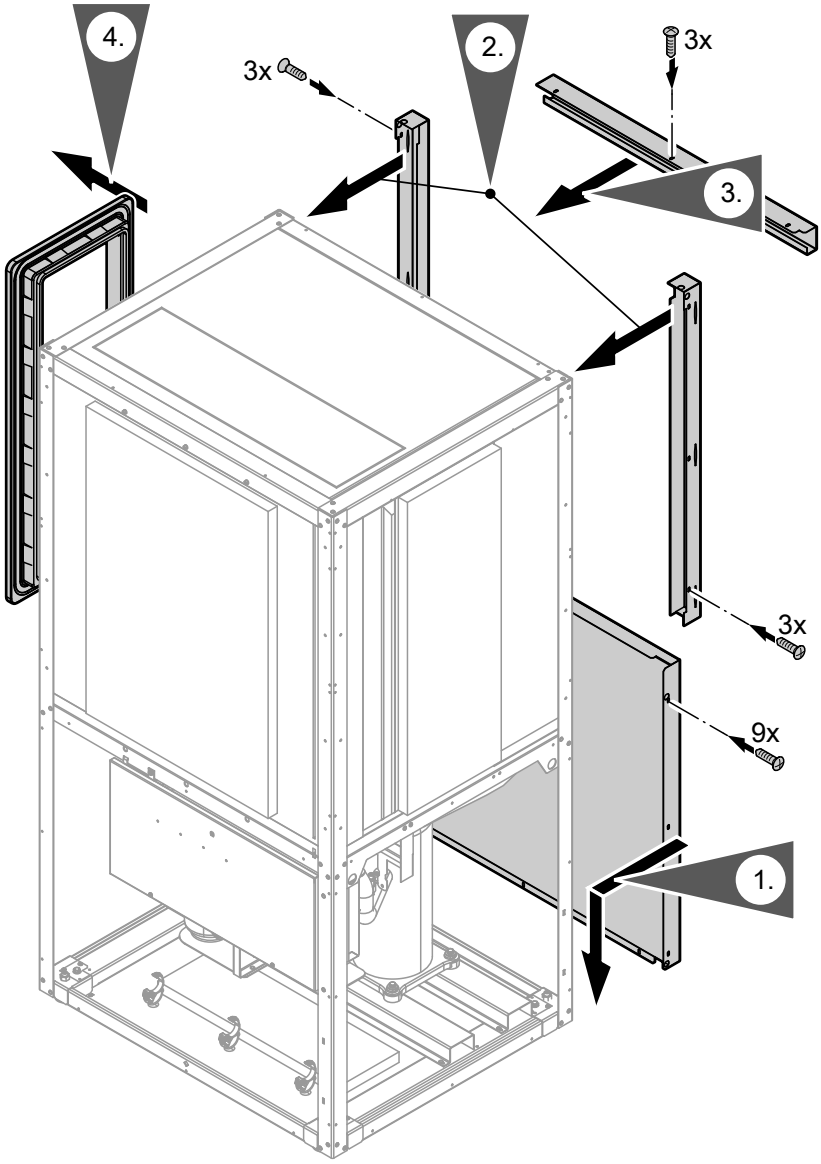

Fig. 14

4. Required only for type AWHI 351.A.

Fitting the outer panels (cont.)

Installation of side panels with air discharge on the l.h. side (delivered condition for type AWHI 351.A)

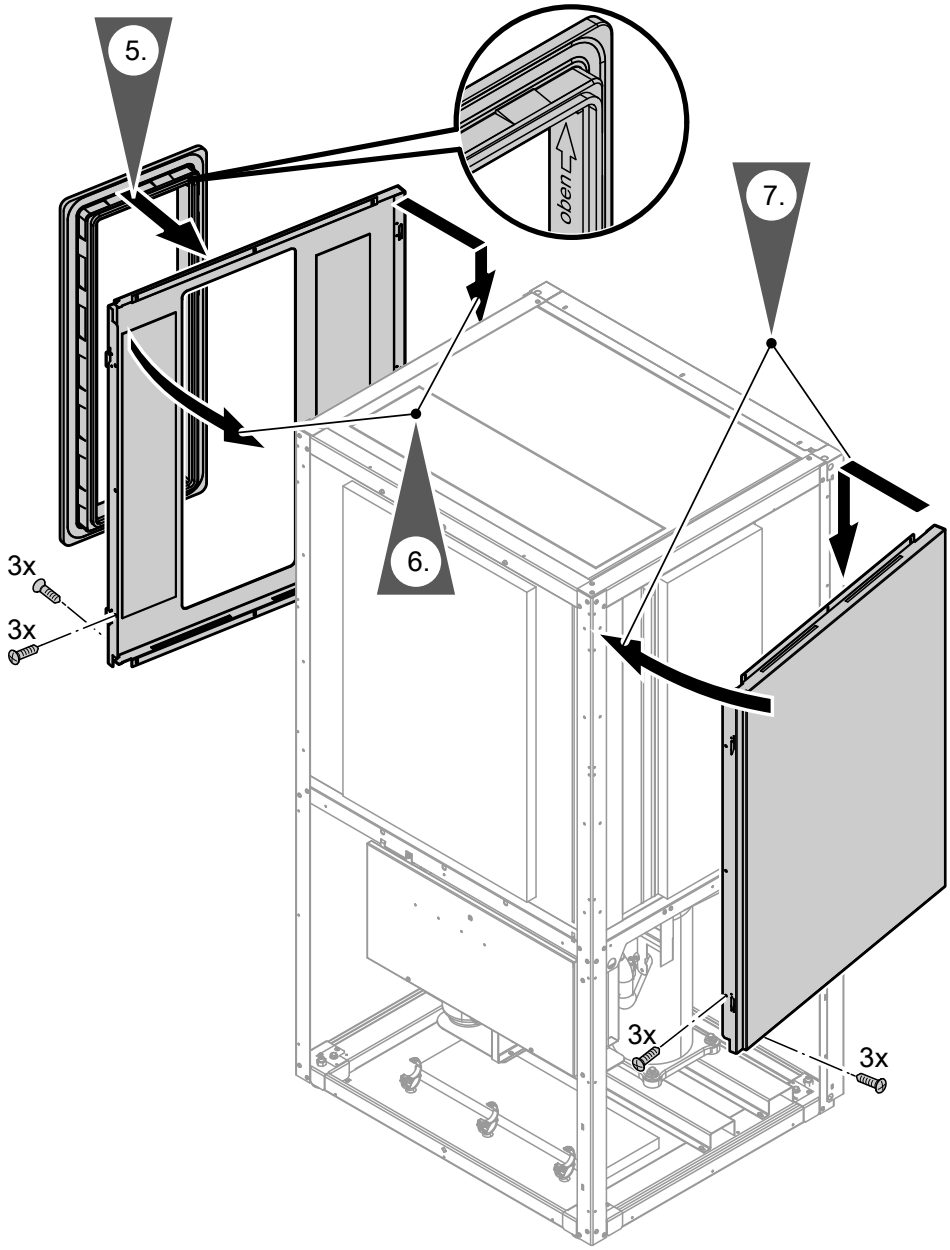

Fig. 15

5. Required only for type AWHI 351.A.

Fitting the outer panels (cont.)

Installation of side panels when air discharge is on the right

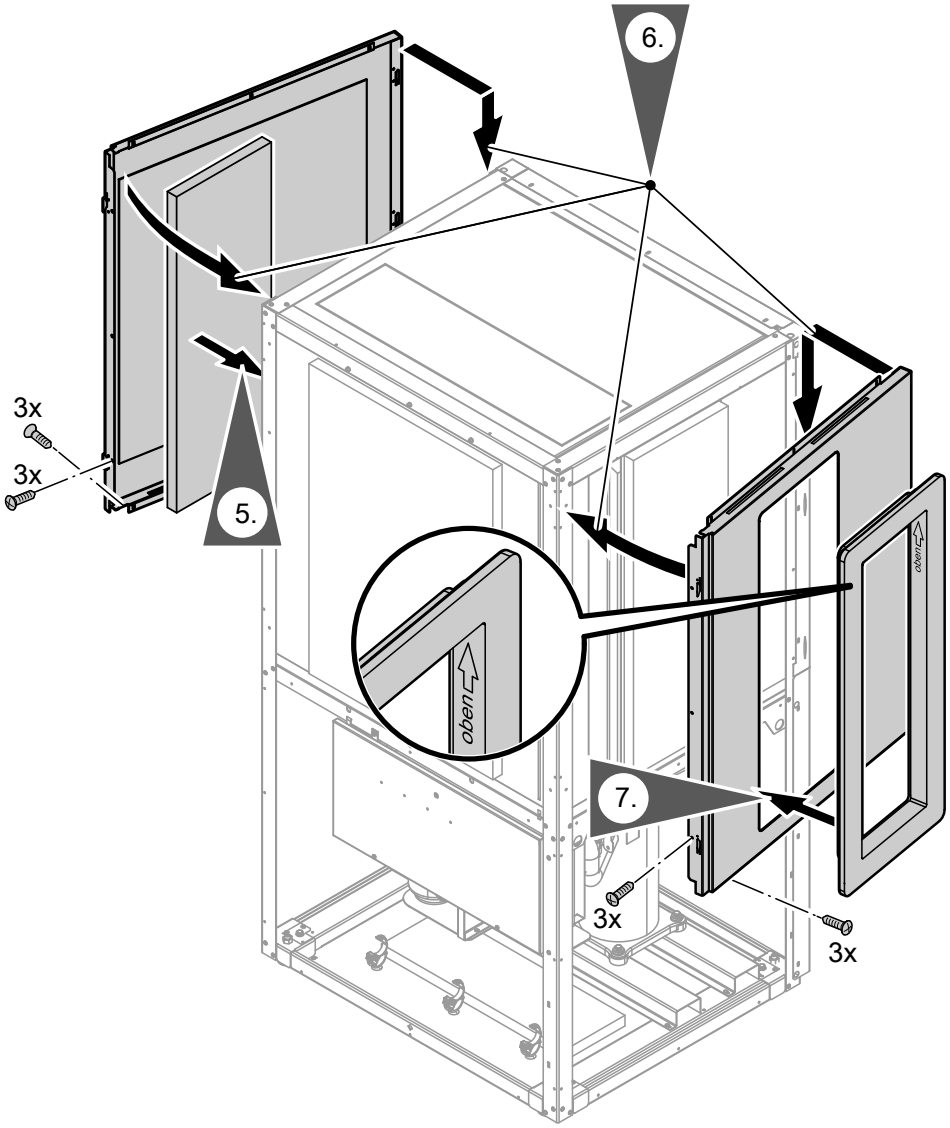

Fig. 16

Note
To facilitate installation, apply a soapy solution to the edges of the side panel insulation.

5. Required only for type AWHI 351.A.

Fitting the outer panels (cont.)

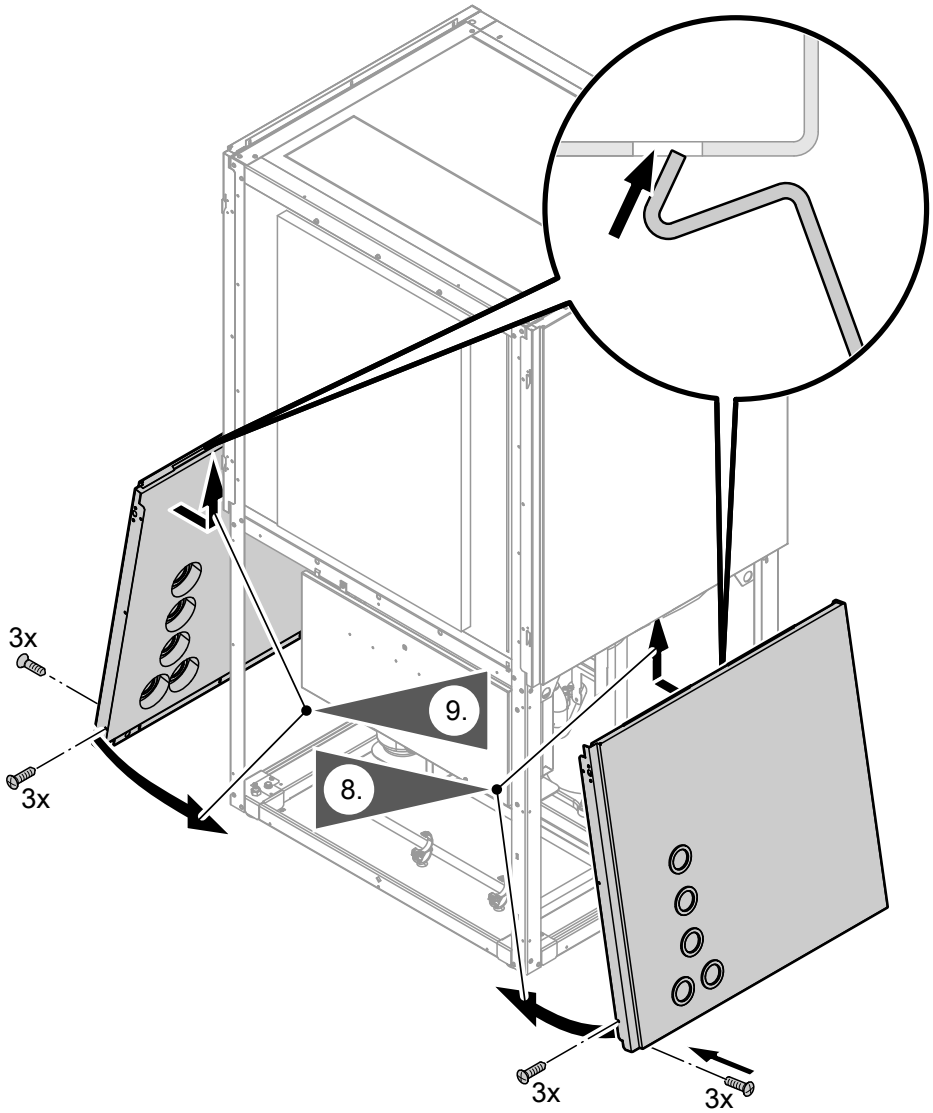

Fig. 17

Fitting the outer panels (cont.)

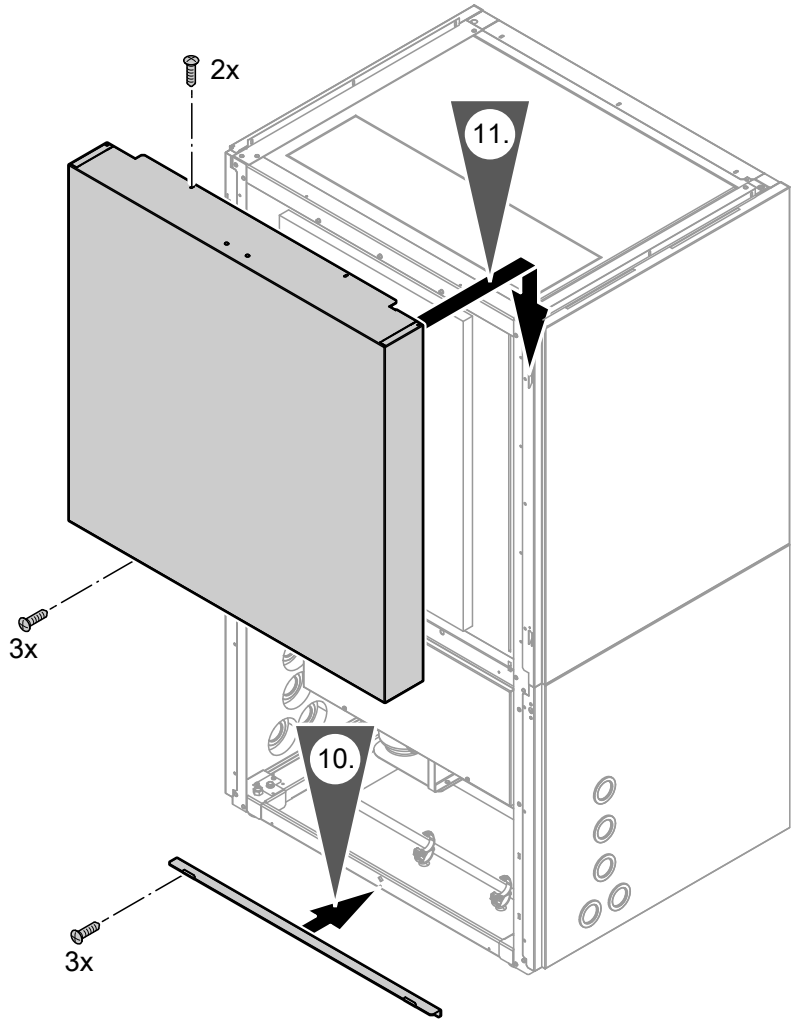

Fig. 18

Type AWHO 351.A only: Fitting the silencer hoods

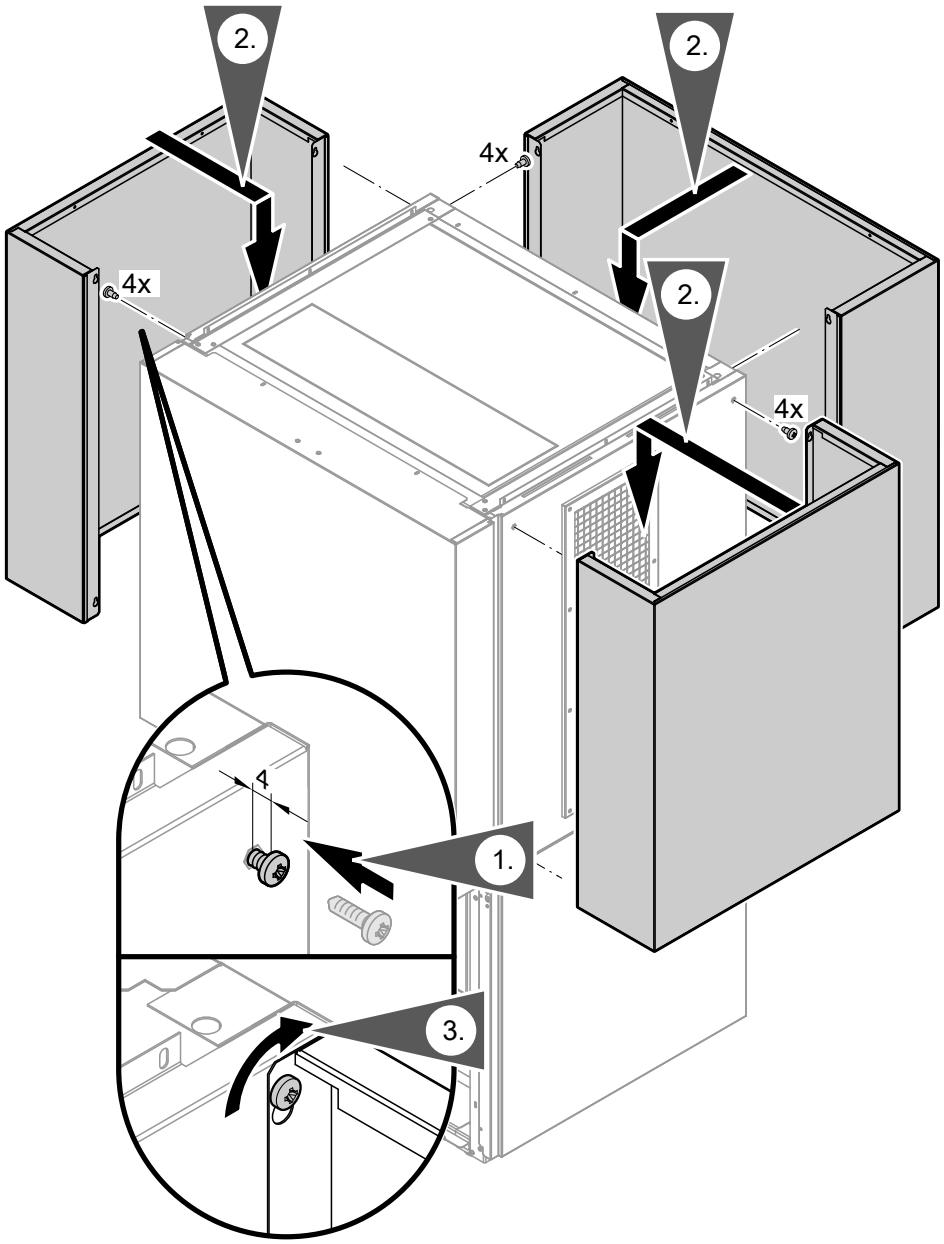

Fig. 19

Fitting the top panel

Type AWHI 351.A

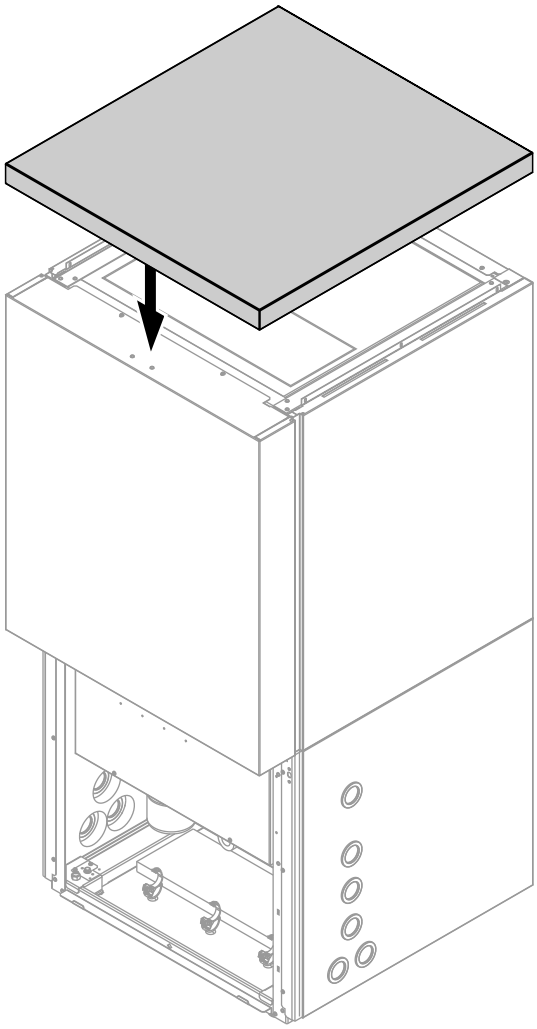

Fig. 20

Type AWHO 351.A

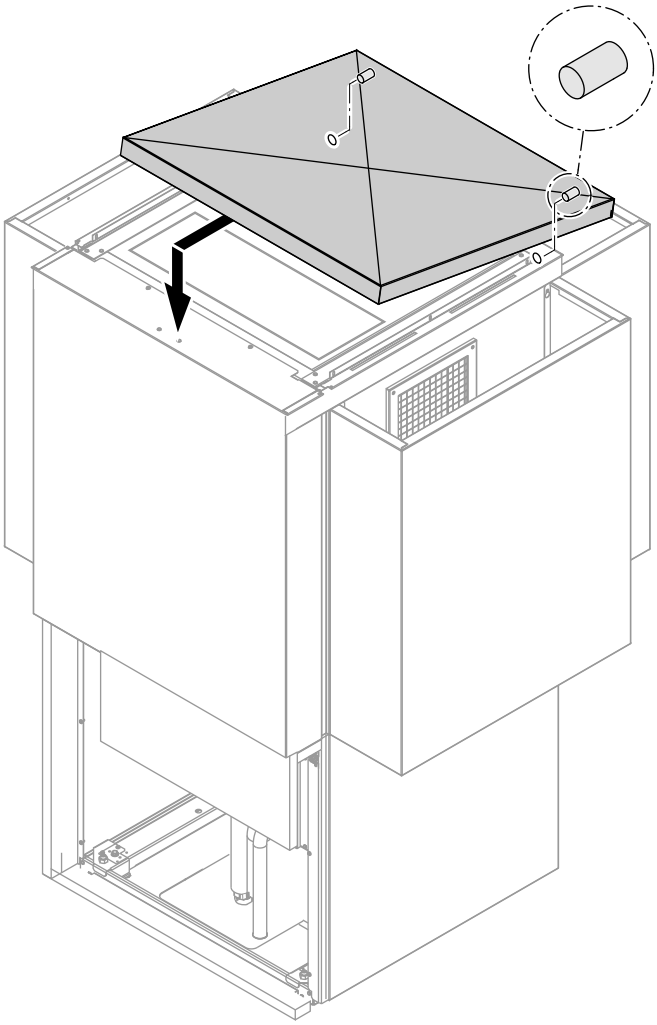

Fig. 21

Siting the heat pump

Connecting the air circuit (primary circuit) (only for type AWHI 351.A)

See also installation information from page 9.

Note
*Make the intake and discharge side **burglar-proof**.*

1. Centre the wall outlets in the wall cut-outs and plaster over correctly.
2. Finish off the external part of intake and discharge side with weather grilles.

Levelling the heat pump

Position the heat pump according to the details on page 8 and page 13. Align horizontally: See the following illustrations.

Secure heat pump type AWHO 351.A on foundations.

Siting the heat pump (cont.)

Type AWHI 351.A:

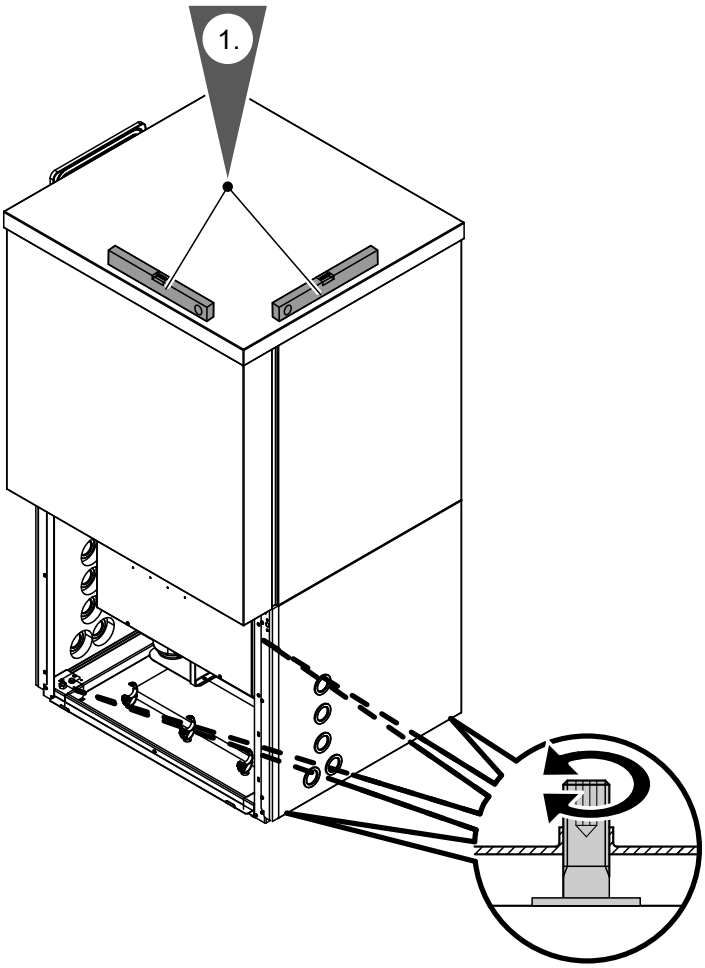

Fig. 22

Siting the heat pump (cont.)

Type AWHO 351.A:

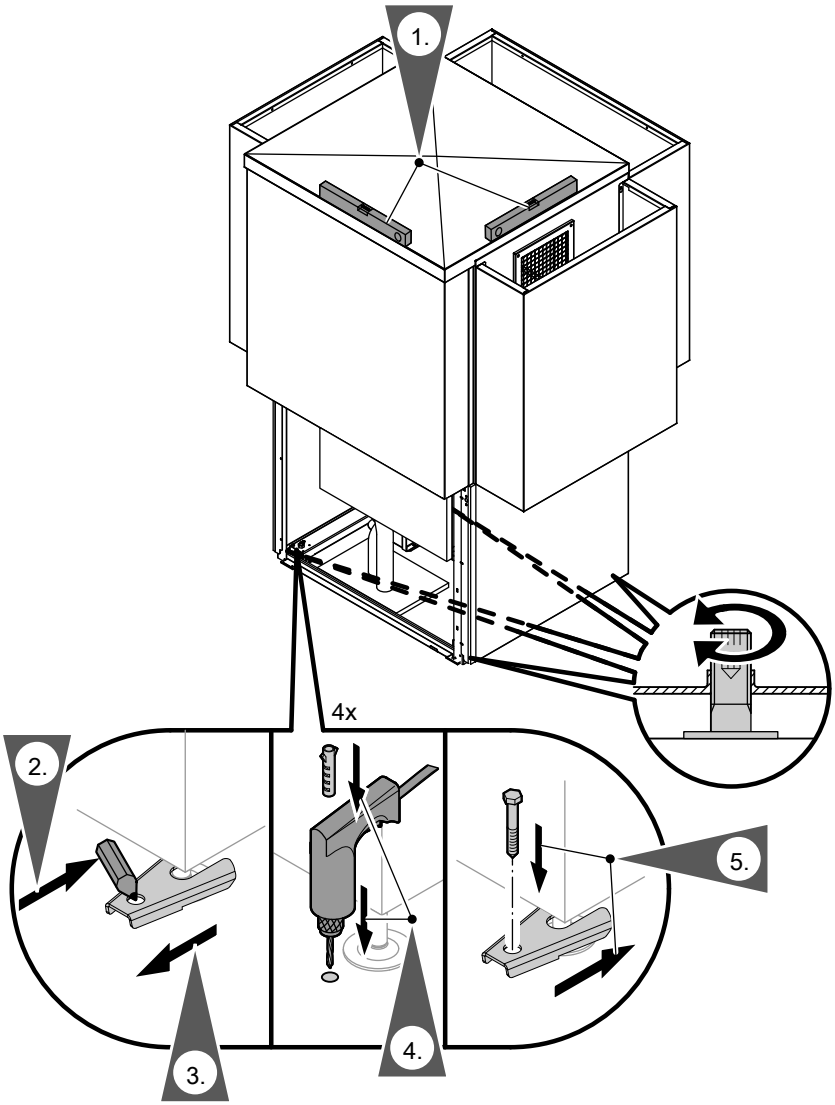

Fig. 23

Hydraulic connections

Note

- *In underfloor heating circuits, integrate a temperature limiter on site for limiting the maximum temperature of underfloor heating systems.*
- *To ensure the minimum flow rate (see specification), fit an overflow valve in every heating circuit (except single pipe heating circuits).*
- *Equip the secondary circuit on site with an expansion vessel.*

Hydraulic connections (cont.)

Information on the condensate drain

- *Subject to temperature and relative humidity, the volume of condensate accumulating from the air can be as high as 20 litres/h.*
- *During the defrosting process, the amount of condensate can be as high as 20 litres within 5 min.*
- *Route condensate drain (drain pipe DN 40) with a constant fall of at least 2 %.*
- *Check that the condensate can drain freely. Remove any air pockets.*

Type AWHI 351.A

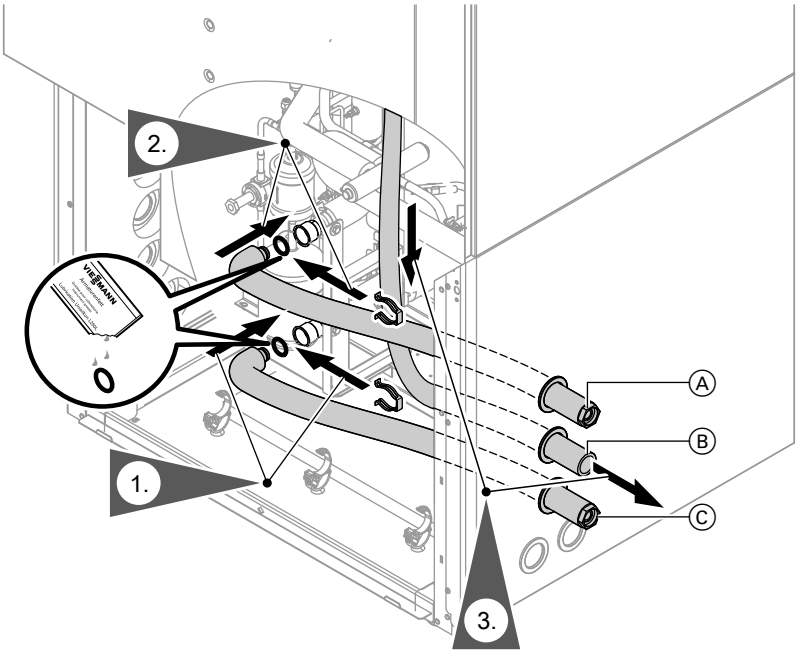

Fig. 24

Note
Hydraulic connections can be made on the left or right

Ⓐ Heating water flow/DHW cylinder flow
Ⓑ Condensate hose
Ⓒ Heating water return/DHW cylinder return

3. Pass the condensate hose from the heat pump out through the central opening. Connect the condensate hose to the on site drain connection via a trap (backup level at least 60 mm).

Technical guide

Hydraulic connections (cont.)

Type AWHO 351.A

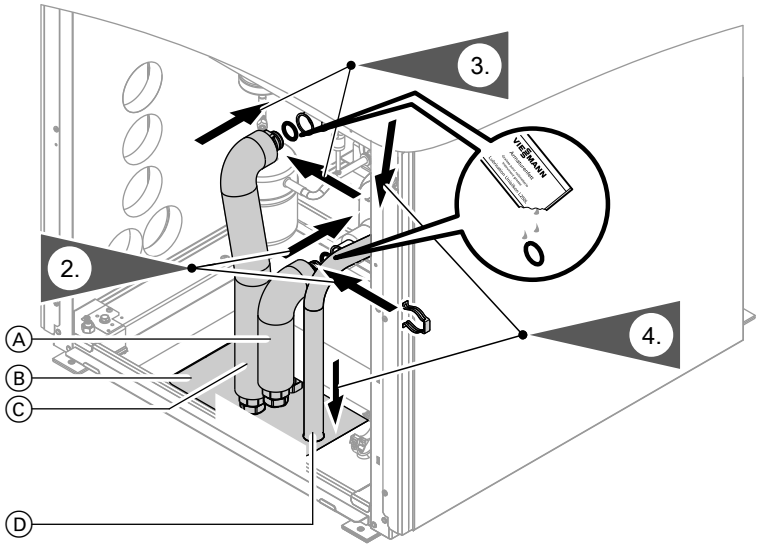

Fig. 25

1. Cut suitable openings on site in sealing mat Ⓑ for hydraulic lines Ⓐ, Ⓒ and condensate drain Ⓓ.

4. Route condensate drain Ⓓ from the heat pump such that it is not directly adjacent to heat-carrying, vibrating or sharp-edged parts.
Connect the condensate hose to the on-site drain connection via a trap (backup level at least 60 mm).

Technical guide

! **Please note**
The condensate hose can freeze up.
Thermally insulate the condensate hose or if necessary install a ribbon heater on site.

5. Pass hydraulic lines Ⓐ and Ⓒ out of the heat pump and connect to the lines in the foundation duct.

! **Please note**
Water-carrying pipes can freeze up.
Thermally insulate pipes inside and outside the heat pump against frost.

6. Remove protective foil from sealing mat Ⓑ. Affix sealing mat Ⓑ to the opening in the base plate.

Fitting the flow temperature sensor, secondary circuit

The flow temperature sensor for the secondary circuit is installed in the heating water flow **inside the building**.

Note
*If an instantaneous heating water heater is installed, fit the flow temperature sensor for the secondary circuit in the heating water flow **downstream** of the instantaneous heating water heater.*

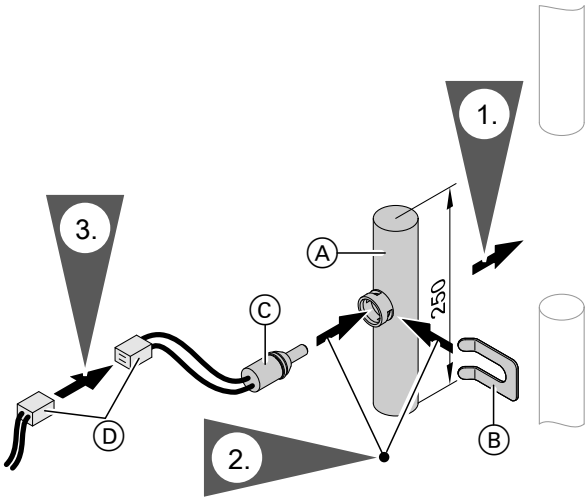

Fig. 26

Ⓐ Pipe section with sensor well
Ⓑ Spring clip
Ⓒ Flow temperature sensor, secondary circuit
Ⓓ Sensor lead plug and lead to the heat pump control unit

1. Fit the pipe section with a sensor well.

2. Secure the flow temperature sensor for secondary circuit with a spring clip in the sensor well.

3. Connect the sensor lead and the lead to the heat pump control unit.

Hydraulic connections (cont.)

4. Connect the lead to the heat pump control unit to the controller and sensor PCB inside the heat pump control unit at connection F8. If necessary, extend the lead to the heat pump control unit on site.

Control panel electrical connections

Opening the control panel

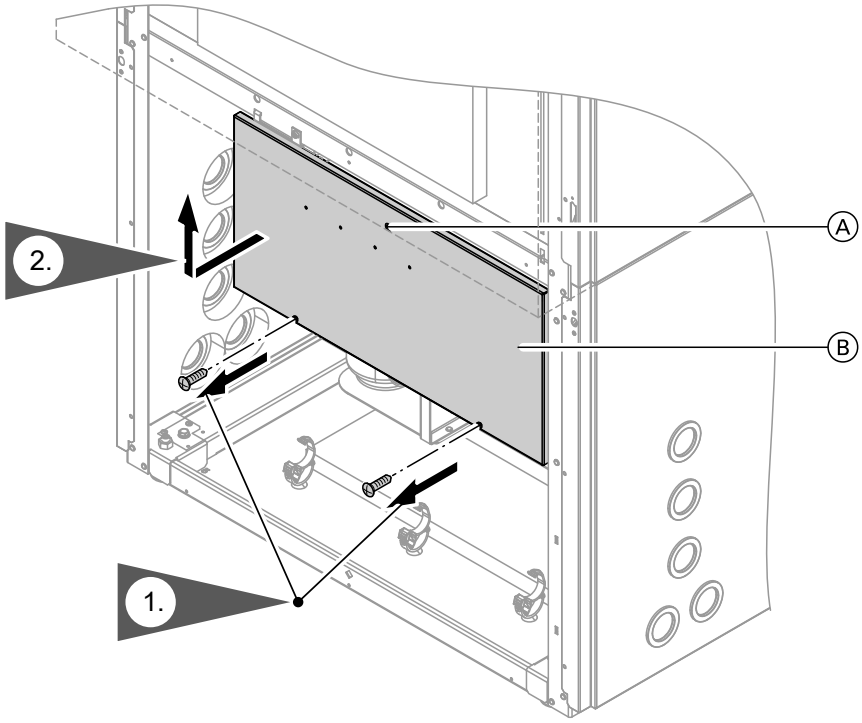

Fig. 27

Ⓐ Control panel with electrical components
Ⓑ Internal earth conductor

1. Undo 2 screws at the bottom of the control panel cover.

2. Pull the control panel cover off downwards and lift out upwards.

   Note
   Undo internal earth conductor Ⓑ prior to removing the cover completely.

Note
In the delivered condition, the coding card is affixed inside the control panel. Remove the coding card and insert into the heat pump control unit; see page 45.

Control panel electrical connections (cont.)

Overview of electrical connections in the control panel

Type AWHI/AWHO 351.A10, AWHI/AWHO 351.A14

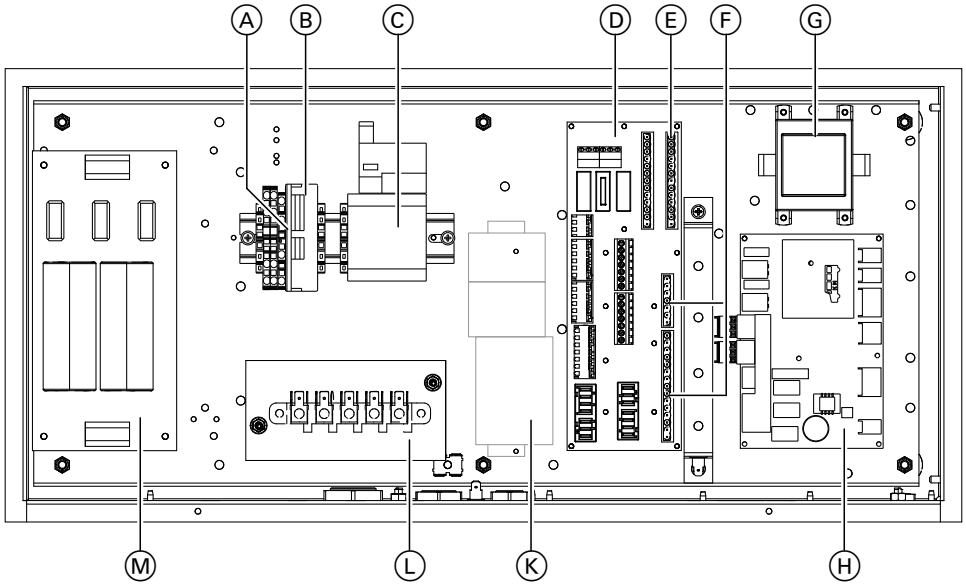

Fig. 28

Type AWHI/AWHO 351.A20

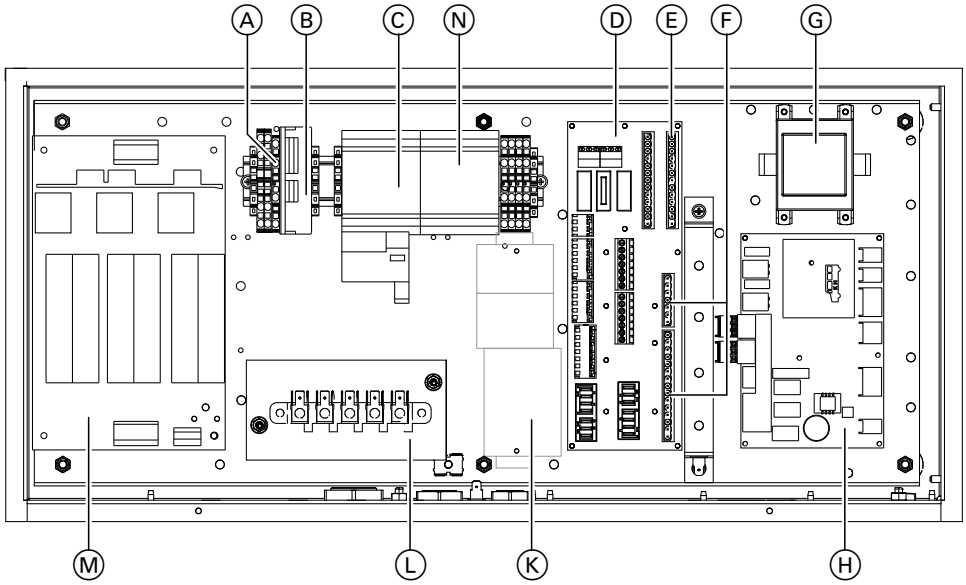

Fig. 29

Ⓐ Fan fuse 6.3 A (slow)
Ⓑ Phase monitor
Ⓒ Compressor contactor
Ⓓ Distributor PCB
Ⓔ Connecting lead: LV lead < 42 V
Ⓕ Connecting cable: Control cable 230 V~
Ⓖ Transformer
Ⓗ Refrigerant circuit controller (EEV)
Ⓚ **Internal heat pump**:
Switching module, instantaneous heating water heater (accessories)
External heat pump:
The switching module for the instantaneous heating water heater is installed on the wall inside the building adjacent to the instantaneous heating water heater (see separate installation instructions).
Ⓛ Mains terminals (400 V~) for compressor and fan with contact shield and power-OFF seal if required
Ⓜ Full wave soft starter
Ⓝ Safety contactor

Control panel electrical connections (cont.)

Routing cables/leads to the control panel

Danger
Damaged cable insulation can cause injury and damage to the appliance.
Route cables so that they cannot touch very hot, vibrating or sharp-edged components.

Internal heat pump

Cable entry from the left

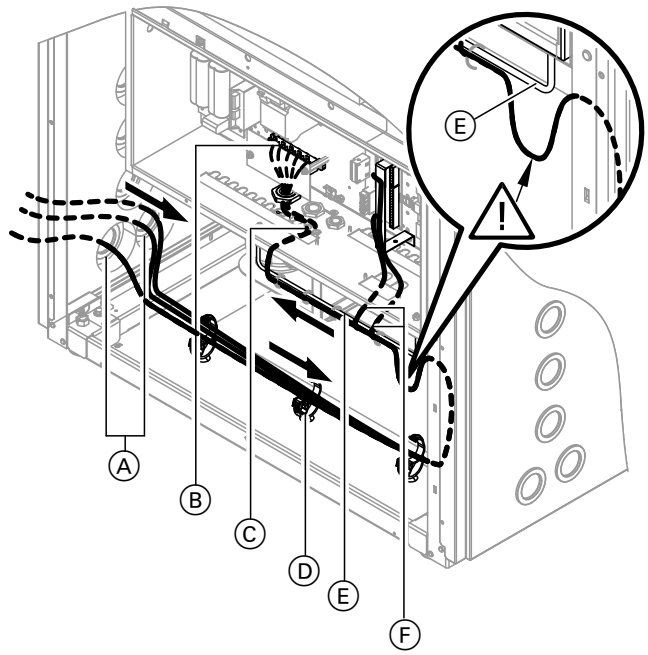

Fig. 30

Cable entry from the right

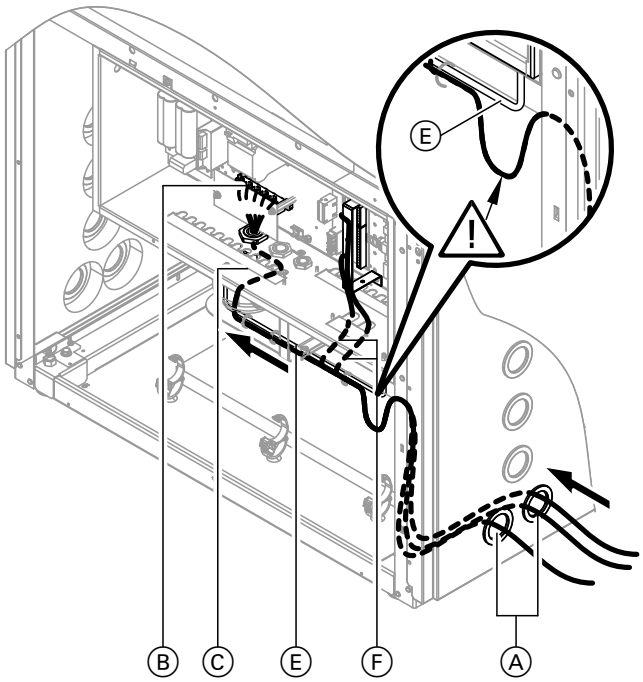

Fig. 31

Ⓐ One cable entry each for LV lead and 230 V/400 V cables
Ⓑ Mains terminals
Ⓒ Power cable 400 V~ with cable fitting
Ⓓ Retaining clip for cables
Ⓔ Cable bracket (cables secured with cable ties)
Ⓕ Connecting cables with plugs: LV lead (< 42 V) and control cable (230 V~) from the heat pump control unit

Control panel electrical connections (cont.)

External heat pump

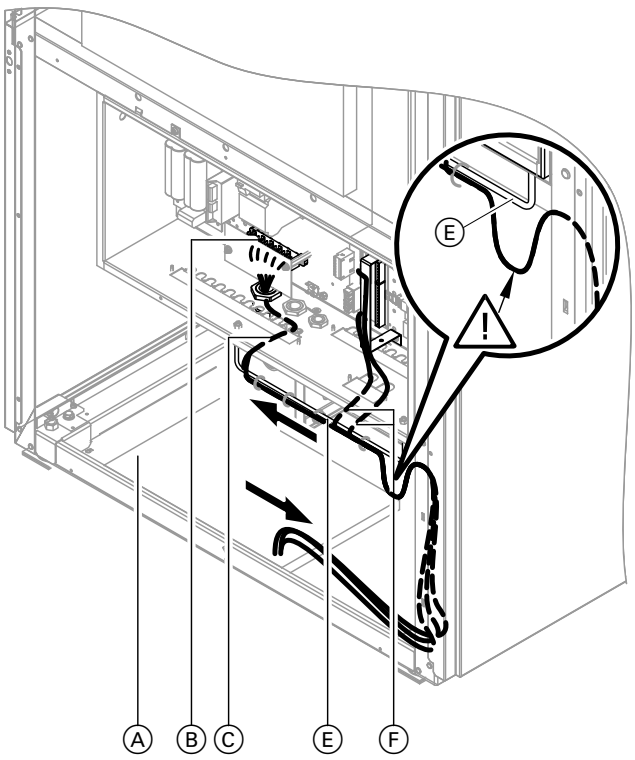

Fig. 32

Ⓐ Sealing mat (for cable entry from below)
Ⓑ Mains terminals
Ⓒ Power cable 400 V~ with cable fitting
Ⓔ Cable bracket (cables secured with cable ties)
Ⓕ Connecting cables with plugs: LV lead (< 42 V) and control cable (230 V~) from the heat pump control unit

1. **Internal heat pump**:
   Route the 230 V cables through one cable entry, and the LV lead through the other cable entry in the l.h. or r.h. side panel.
   External heat pump:
   Cut one entry in the sealing mat for the 230 V cables and a second entry for the LV lead. Route the cables from below through the sealing mat.

2. Route the cables through the prefitted retainers. Secure the LV lead and 230 V cables separately.

3. Secure the cables below the front edge of the control panel with a loop (see previous diagram) to the cable bracket.

4. Push the connecting lead/cables (LV lead < 42 V and control cable 230 V~) from the heat pump control unit into the corresponding plug-in connections on the distributor PCB inside the control panel.

5. Route 400 V~ power cable through cable fitting and apply strain relief. Carry out the mains connection according to page 58.

   Note
   The 400 V~ power supply is protected against accidental contact with a contact shield. This contact shield can be sealed for power-OFF (if required).

Control panel electrical connections (cont.)

Attaching the connecting cables from the control unit in the control panel

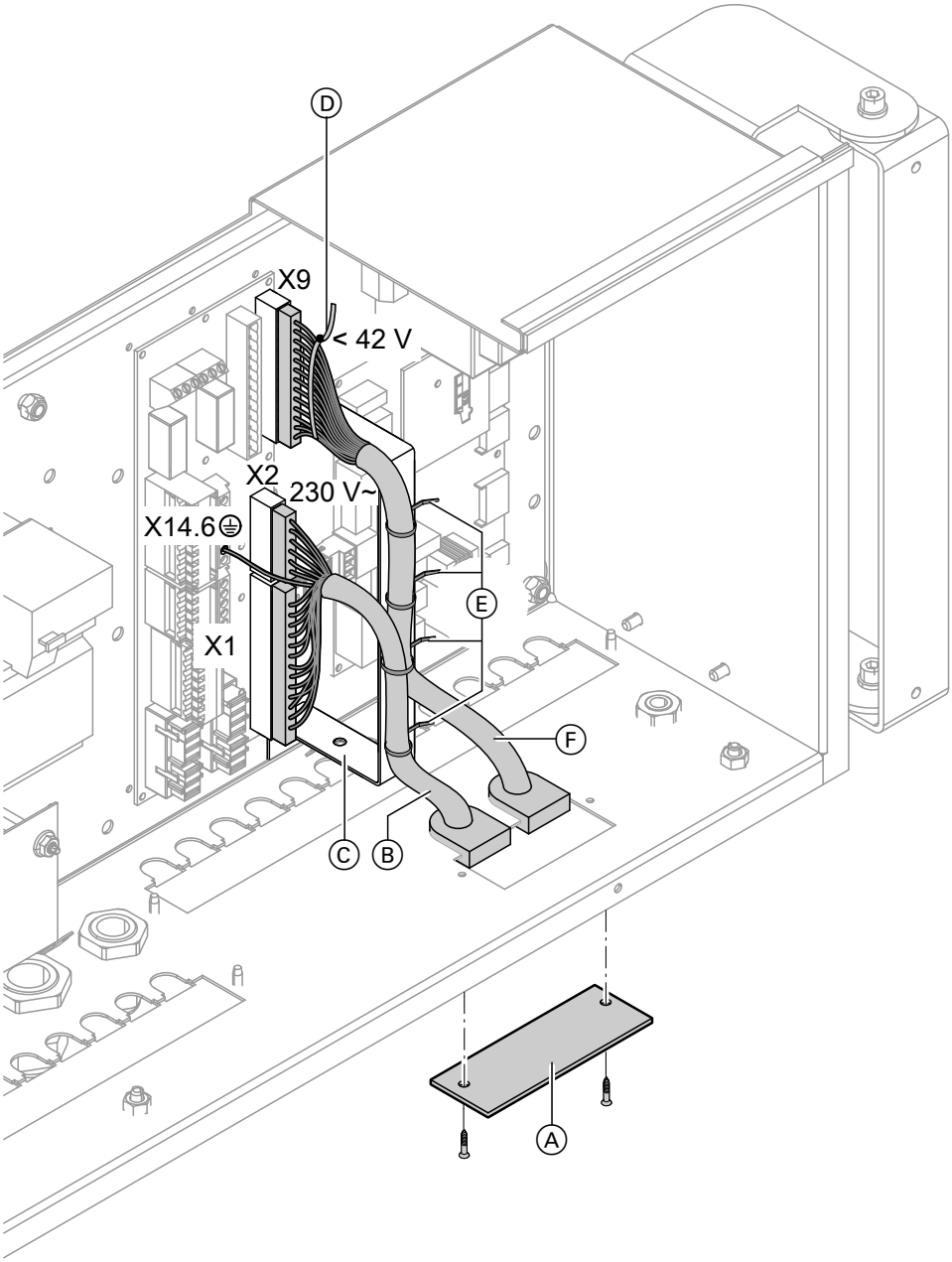

Fig. 33

1. Remove cover Ⓐ.
2. Route cables Ⓑ and Ⓕ through the entry in the control panel and plug in strain relief fittings.
3. Secure cover Ⓐ.
4. Push the plug of connecting lead Ⓕ (LV lead **< 42 V**) onto the **13-pin** plug-in strip **X9**.
5. Push the plugs of the connecting cable Ⓑ (control cable **230 V~**) onto the **7-pin** plug-in strip **X2** and **15-pin** plug-in strip **X1**.
6. Affix the individual cores of connecting cable Ⓑ (control cable **230 V~**) to terminal **X14.6** for the PE connection.
7. Secure connecting cables Ⓑ and Ⓕ with 4 cable ties Ⓔ to bracket Ⓒ.
8. Bundle all cores of connecting cable Ⓕ close to plug Ⓓ using cable ties. This ensures that if a fault occurs, for example when detaching a wire, the wires cannot drift into the adjacent voltage area.

Heat pump control unit electrical connections

Fitting the heat pump control unit and inserting cables

Wall mounting base and casing base, fitting

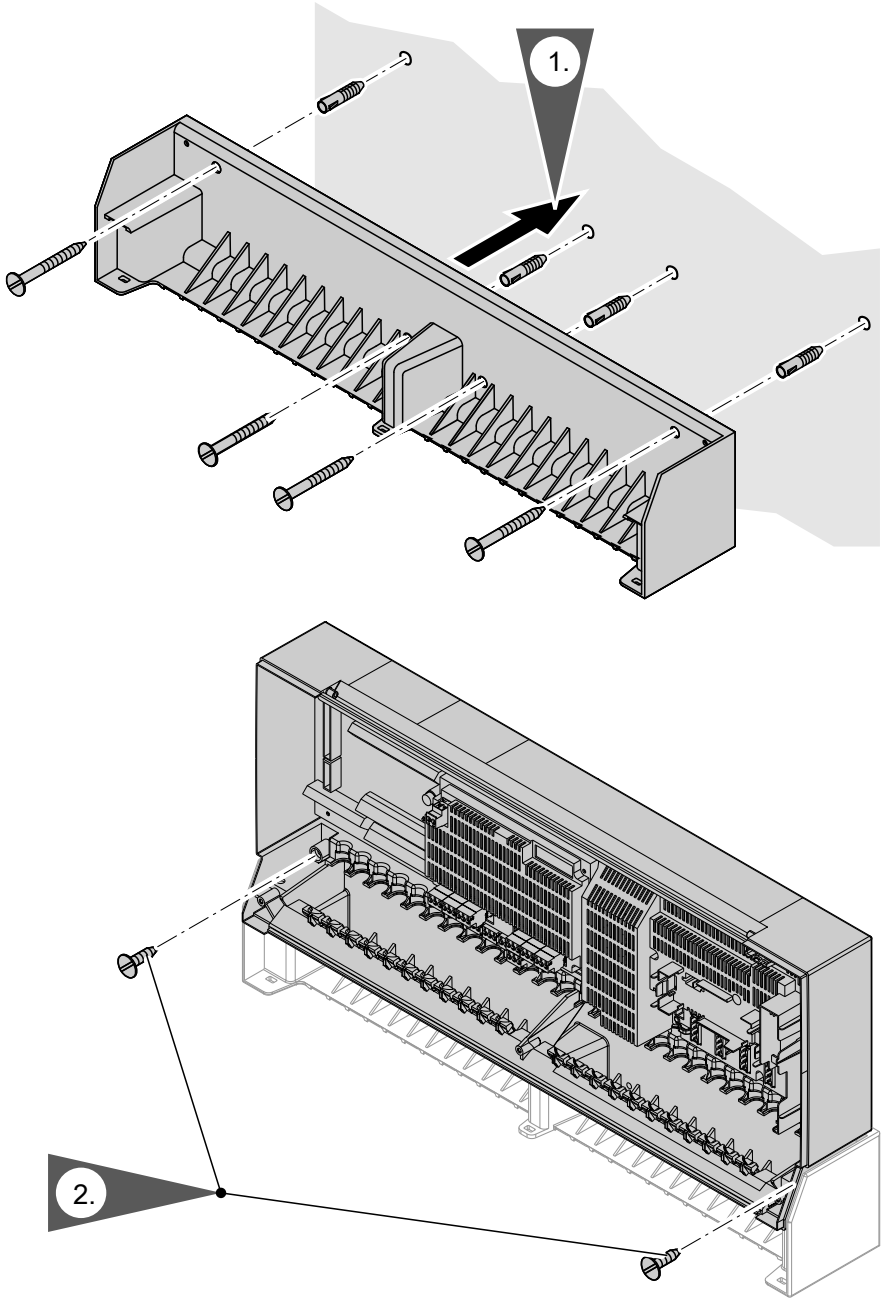

Fig. 34

Heat pump control unit electrical connections (cont.)

Fitting the casing front

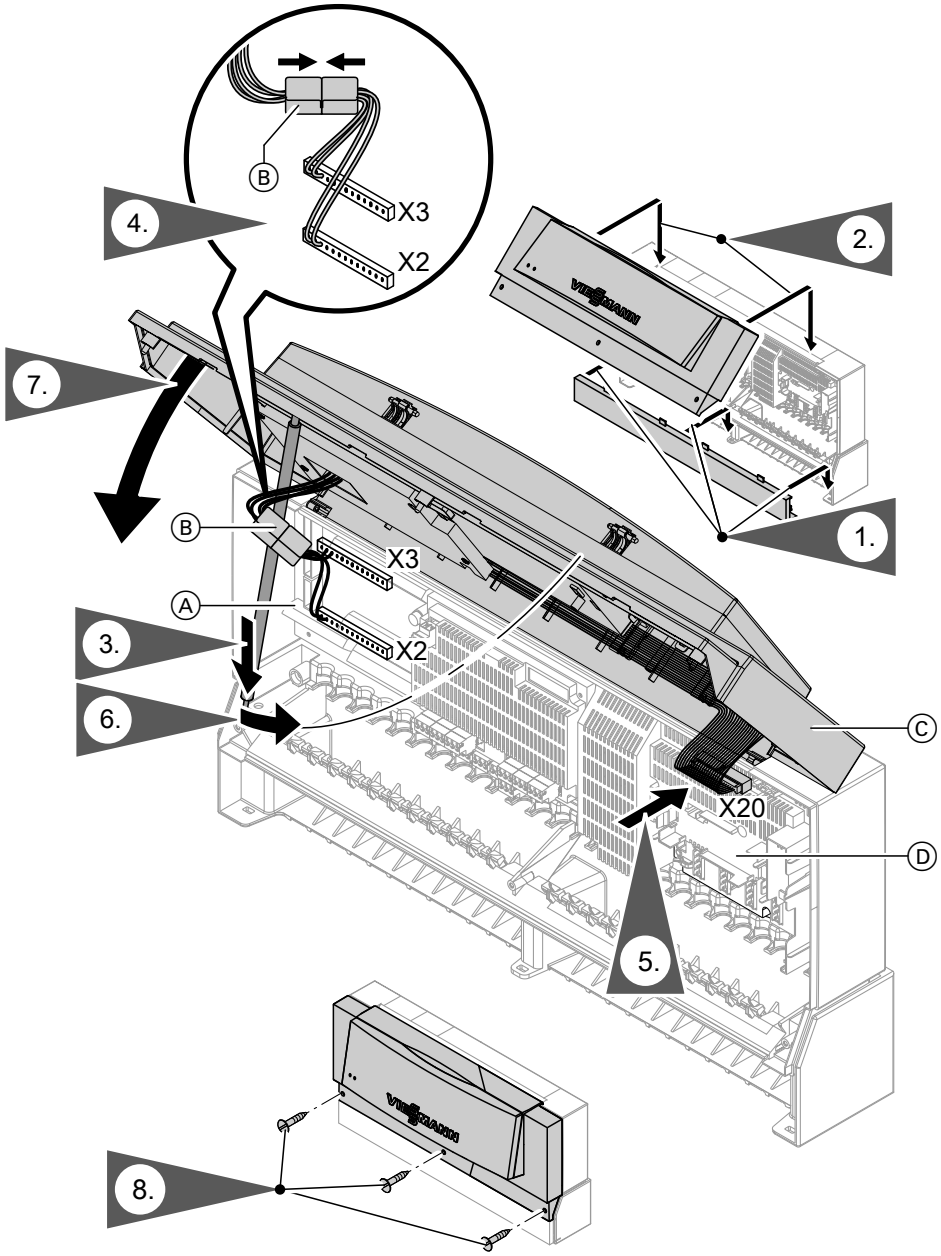

Fig. 35

Ⓐ Cross connect PCB
Ⓑ ON/OFF switch plug-in connection
Ⓒ Casing front
Ⓓ Controller and sensor PCB

Heat pump control unit electrical connections (cont.)

Heat pump control unit, open

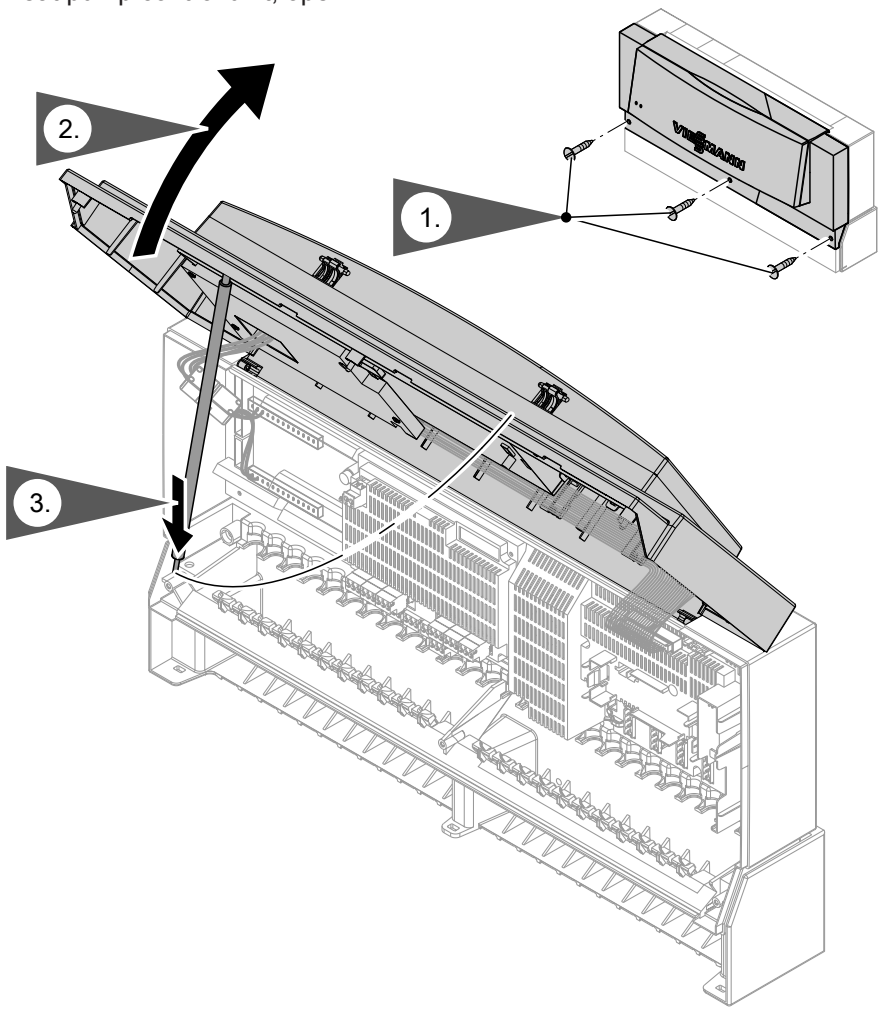

Fig. 36

Heat pump control unit electrical connections (cont.)

Cables, inserting and applying strain relief

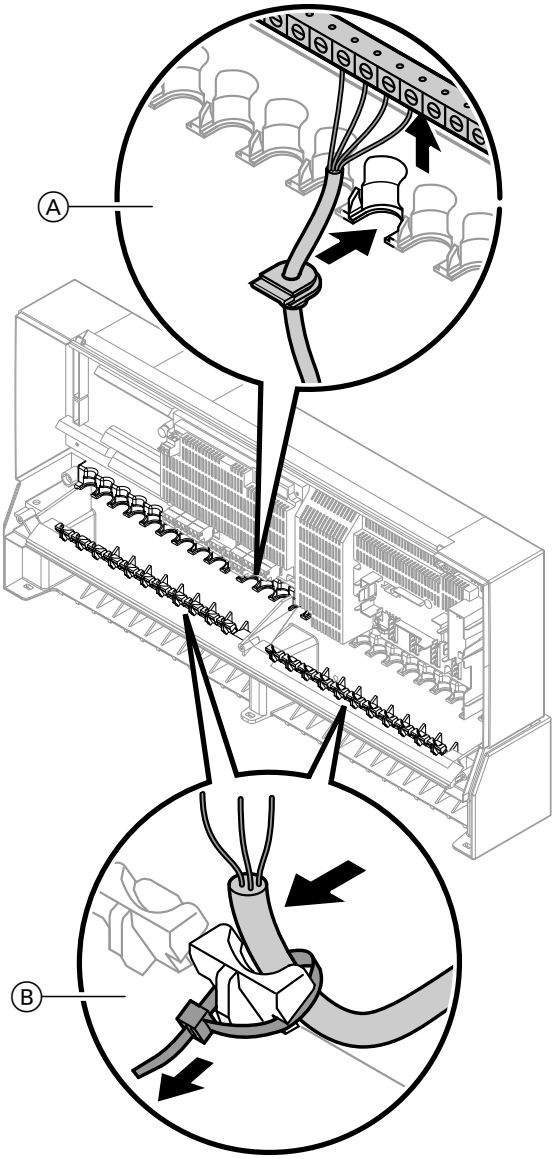

Fig. 37

Ⓐ Cables with moulded strain relief
Ⓑ On-site cables/leads

Heat pump control unit electrical connections (cont.)

Attaching cables from the control panel in the control unit

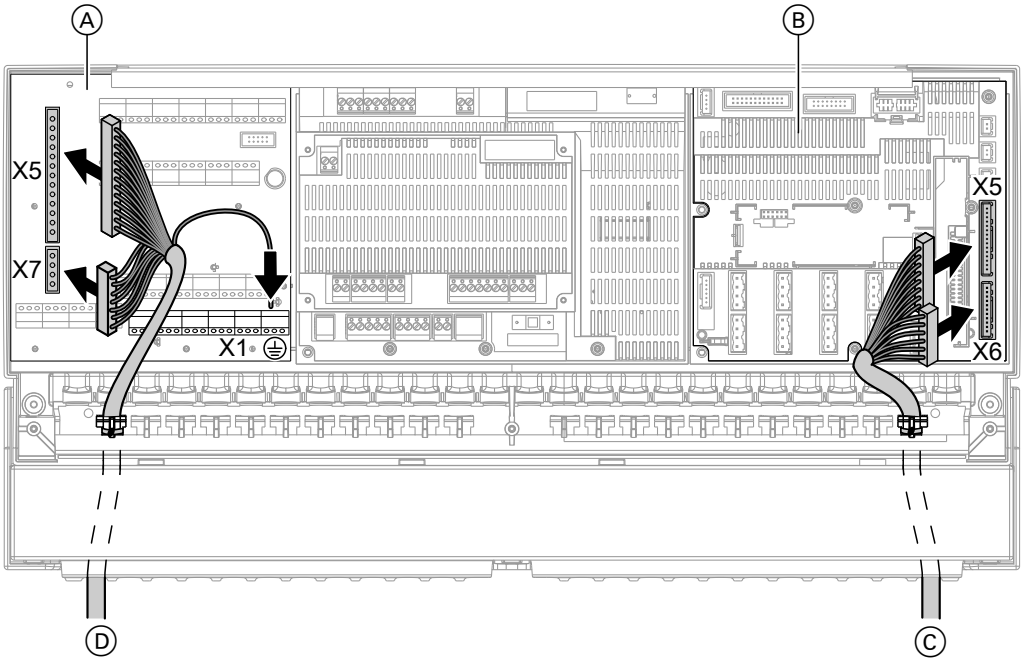

Fig. 38

Ⓐ Cross connect PCB
Ⓑ Controller and sensor PCB
Ⓒ Connecting cable (LV lead < 42 V)
Ⓓ Connecting cable (control cable 230 V~)

Adapting the heat pump control unit

The secondary pump and/or the instantaneous heating water heater (accessories) can be fitted inside (type AWHI 351.A) **or** outside (type AWHI 351.A, AWHO 351.A) of the heat pump.

The circulation pump for cylinder heating can **only** be installed outside the heat pump.

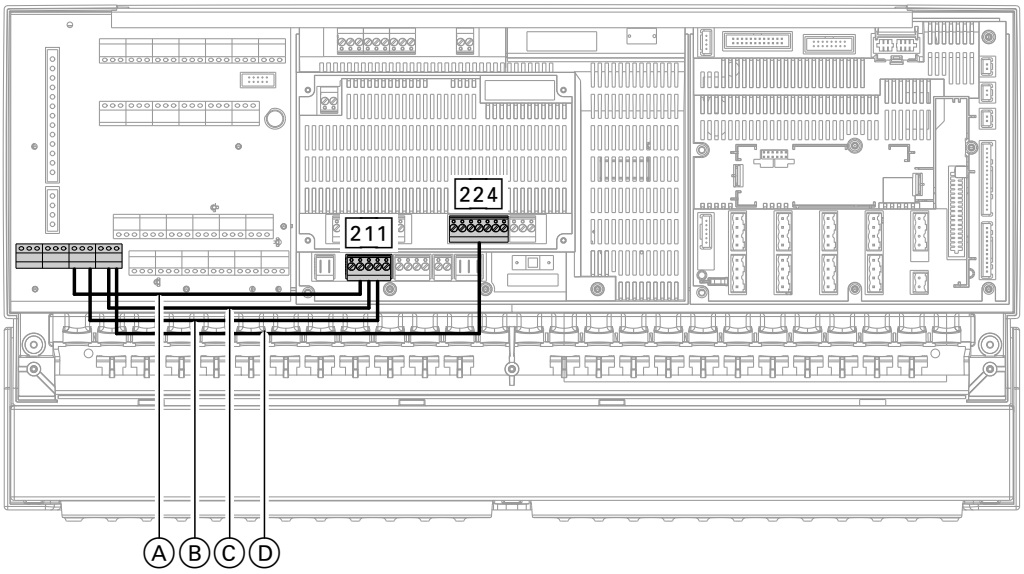

Fig. 39 The red cores connect the following terminals:

Ⓐ X6.6 — 211.2
Ⓑ X6.4 — 211.4
Ⓒ X6.2 — 211.3
Ⓓ X6.1 — 224.4

5692878

Heat pump control unit electrical connections (cont.)

Subject to system version, one or more of the 4 red wires will need to be removed in accordance with the following details.

Type AWHO 351.A

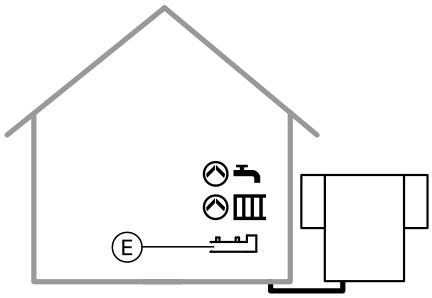

Fig. 40

Ⓔ Instantaneous heating water heater (accessories)

Red wires to be removed (see fig. 39 on page 43)
Ⓐ X6.6 — 211.2
Ⓑ X6.2 — 211.3
Ⓒ X6.1 — 224.4
Ⓓ X6.4 — 211.4

Electrical connections for components

The following components are connected up in the heat pump control unit (see page 46 onwards):
- Secondary pump
- Circulation pump for cylinder heating
- Instantaneous heating water heater switching

Type AWHI 351.A

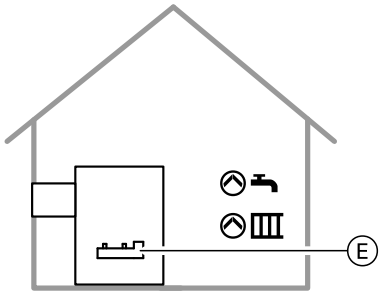

Fig. 41

Ⓔ Instantaneous heating water heater (accessories)

Red wires to be removed (see fig. 39 on page 43)
Ⓐ X6.6 — 211.2
Ⓓ X6.4 — 211.4

Electrical connections for components

The following components are connected up in the heat pump control unit (see page 46 onwards):
- Secondary pump
- Circulation pump for cylinder heating

The following components are connected up in the heat pump control panel (see separate installation instructions and page 34 onwards):
- Instantaneous heating water heater

Type AWHI 351.A

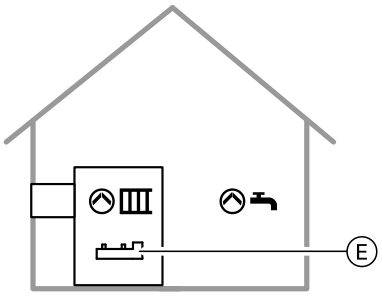

Fig. 42

Ⓔ Instantaneous heating water heater (accessories)

Red wires to be removed (see fig. 39 on page 43)
Ⓓ X6.4 — 211.4

Electrical connections for components

The following components are connected up in the heat pump control unit (see page 46 onwards):
- Circulation pump for cylinder heating

The following components are connected up in the heat pump control panel (see separate installation instructions and page 34 onwards):
- Secondary pump
  Note
  Electrical connection, on-site secondary pump, see the following chapter.
- Instantaneous heating water heater

Electrical connection of the on-site secondary pump

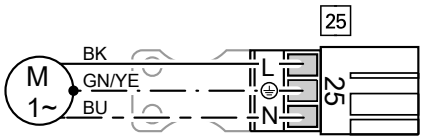

Fig. 43

5692878

Heat pump control unit electrical connections (cont.)

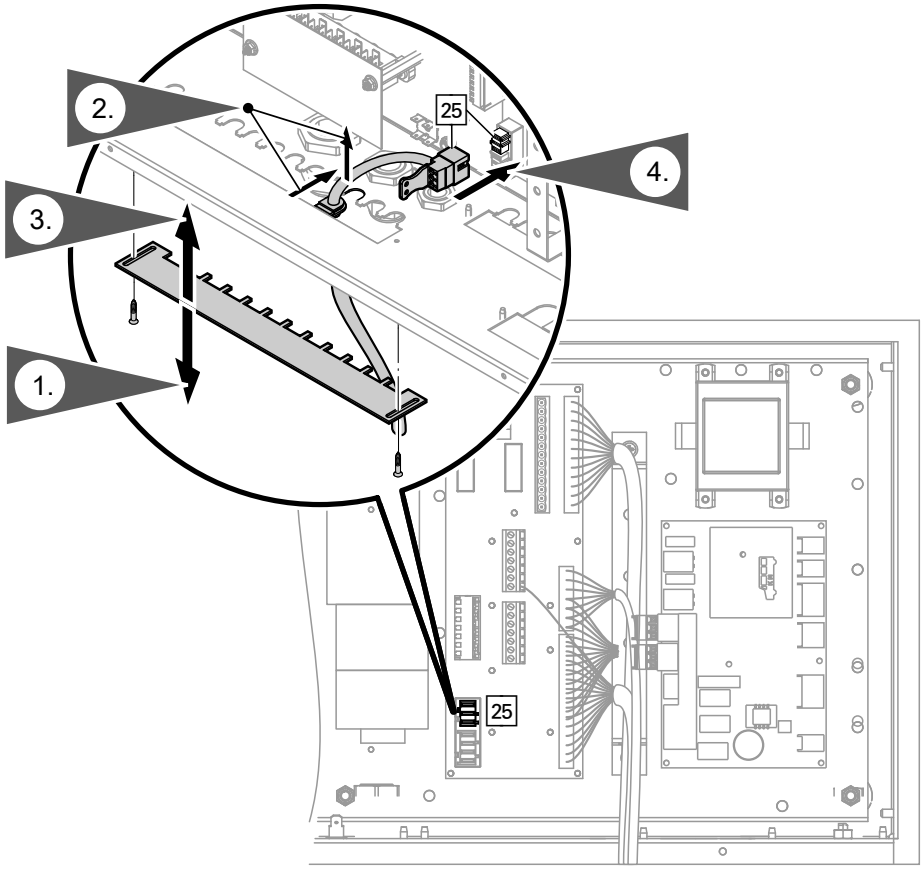

Fig. 44

Inserting the coding card

Only insert the coding card that comes supplied with the heat pump.

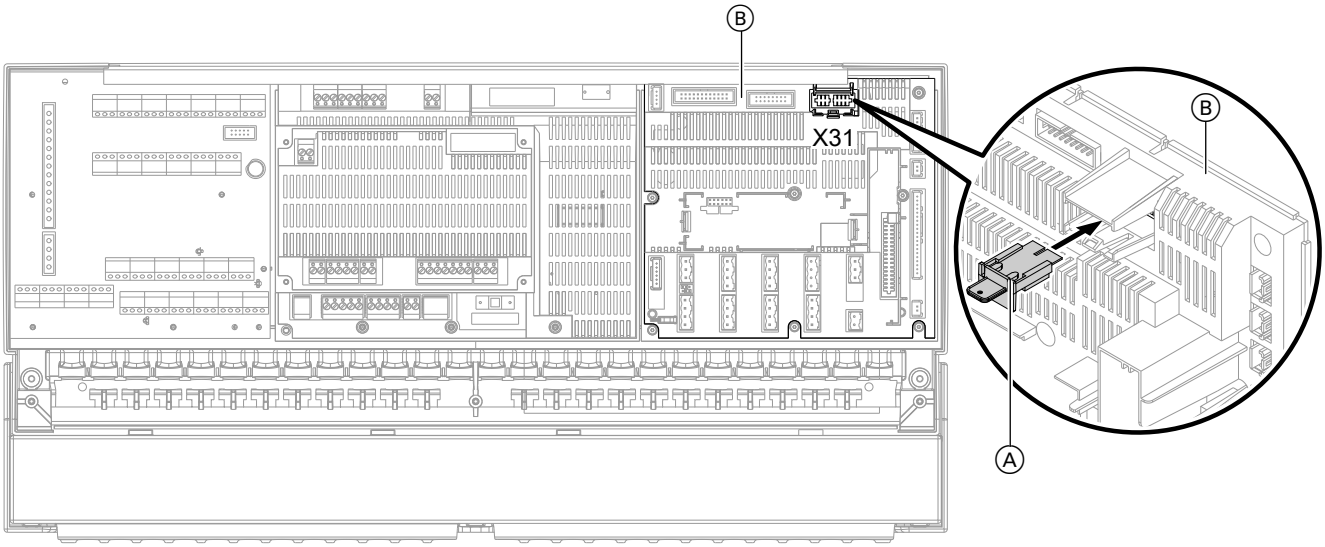

Fig. 45

Ⓐ Coding card
Ⓑ Controller and sensor PCB

Heat pump control unit electrical connections (cont.)

Overview of electrical connections

Danger
Incorrect wiring can lead to serious injury from electrical current and result in appliance damage.
Take the following measures to prevent wires drifting into the adjacent voltage area:
- Route LV leads < 42 V separately from cables > 42 V/230 V~/400 V~ and secure with cable ties.
- Only strip the minimum of insulation from cables as close as possible to the terminals and bundle tightly to the corresponding terminals.
- If 2 components are connected to the same terminal, press both cores together in a **single** wire ferrule.

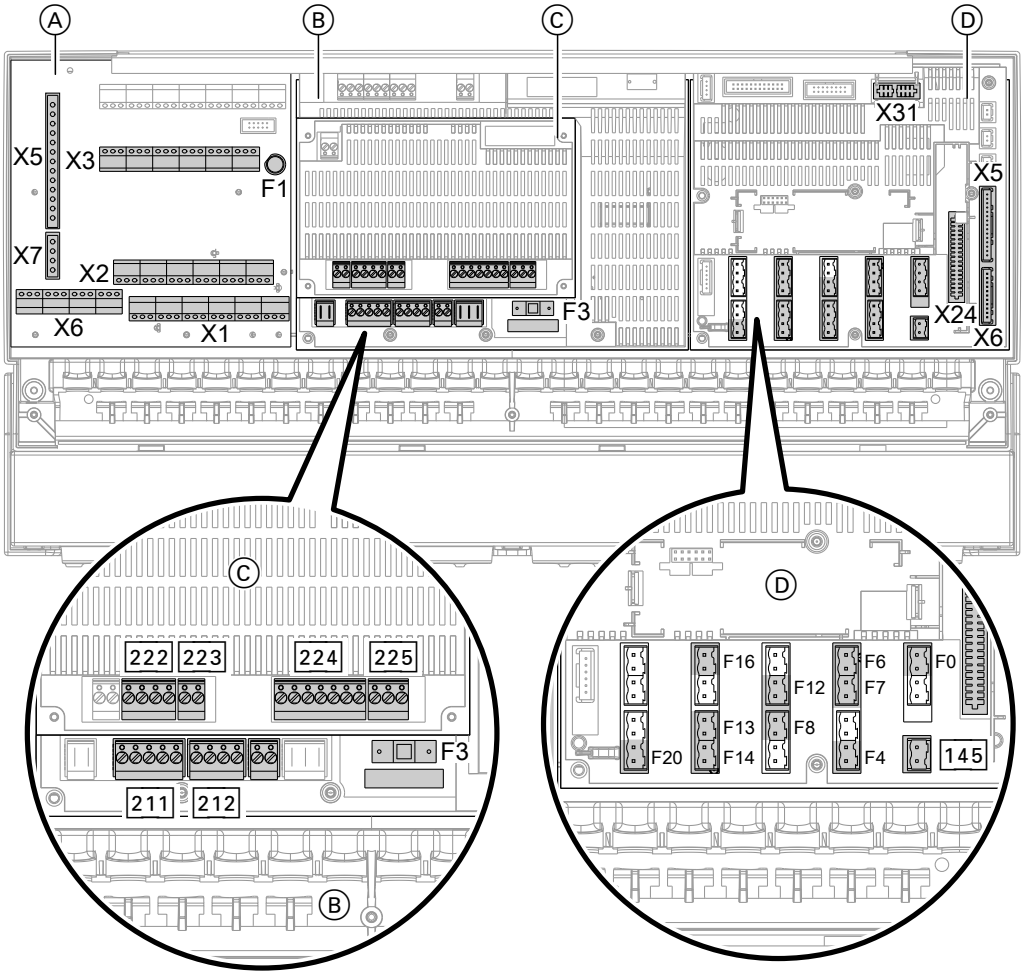

Fig. 46

Ⓐ Cross connect PCB
F1 Fuse 6.3 A (slow)
X6 Red wires for matching the heat pump control unit to the system version (see page 43)

Ⓑ Main PCB
F3 Fuse 6.3 A (slow)

Ⓒ Expansion PCB

Ⓓ Controller and sensor PCB

Heat pump control unit electrical connections (cont.)

Main PCB (operational components 230 V~)

Information regarding the connection values

- *The specified output is the recommended connected load.*
- *The total output of all components connected directly to the heat pump control unit (e.g. pumps, valves, message facilities, contactors) must not exceed 1000 W.*
  If the total output is < 1000 W, the individual rating of a component (e.g. pump, valve, message facility, contactor) can be greater than specified. However, the breaking capacity of the corresponding relay must not be exceeded.
- *The stated current indicates the max. switching current of the switching contact (observe the total current of 5 A).*
- *Controls for external heat source and central fault messages are unsuitable for safety LV.*

Set the required parameters during commissioning; see from page 73.

Plug 211

Terminals	Function	Explanation
211.1	Fan	Connection values: ▪ Output: 200 W ▪ Voltage: 230 V~ ▪ Max. switching current: 4(2) A
211.2	Secondary pump	▪ In systems without a heating water buffer cylinder, no other heating circuit pump is required (see terminal 212.2). ▪ Connect the temperature limiter to restrict the maximum temperature for underfloor heating systems (if installed) in series (see the following chapter). Connection values: ▪ Output: 130 W ▪ Voltage: 230 V~ ▪ Max. switching current: 4(2) A
211.3	Control of instantaneous heating water heater, stage 1	Connection values: ▪ Output: 10 W ▪ Voltage: 230 V~ ▪ Max. switching current: 4(2) A See installation instructions for instantaneous heating water heater and switching module.
211.4	Circulation pump for cylinder heating	Connection values: ▪ Output: 130 W ▪ Voltage: 230 V~ ▪ Max. switching current: 4(2) A

Heat pump control unit electrical connections (cont.)

Plug 212		
Terminals	**Function**	**Explanation**
212.2	Heating circuit pump for heating circuit without mixer A1/HC1	▪ If a heating water buffer cylinder is installed, this pump will be installed in addition to the secondary pump. ▪ Connect temperature limiter to restrict the maximum temperature for underfloor heating systems (if installed) in series: See the following chapter. Connection values: ▪ Output: 100 W ▪ Voltage: 230 V~ ▪ Max. switching current: 4(2) A
212.3	DHW circulation pump	Connection values: ▪ Output: 50 W ▪ Voltage: 230 V~ ▪ Max. switching current: 4(2) A
212.4 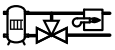	3-way diverter valve for heating water buffer cylinder bypass or heat pump in the case of dual alternative mode	Connection values ▪ Output: 130 W ▪ Voltage: 230 V~ ▪ Max. switching current: 4(2) A

Connecting a temperature limiter as a maximum temperature limiter for underfloor heating

Connecting a general temperature limiter Ⓑ

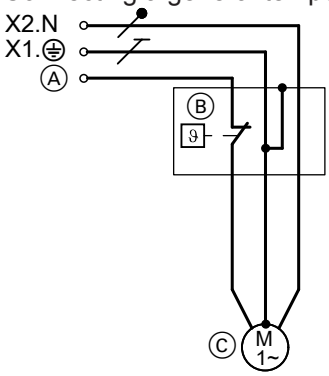

Fig. 47

Connecting the temperature limiter, part no. 7151 728, 7151 729 Ⓑ

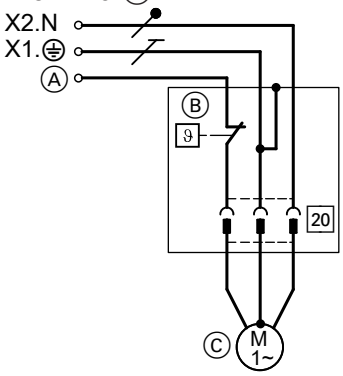

Fig. 48

	Connection Ⓐ to control unit	Circulation pump Ⓒ
Heating circuit without mixer A1/HC1		
▪ Without heating water buffer cylinder	211.2	Secondary pump
▪ With heating water buffer cylinder	212.2	Heating circuit pump A1/HC1
Heating circuit with mixer M2/HC2	225.1	Heating circuit pump M2/HC2

Heat pump control unit electrical connections (cont.)

Connecting the temperature limiter, part no. 7151 728, 7151 729 Ⓑ to the mixer extension kit

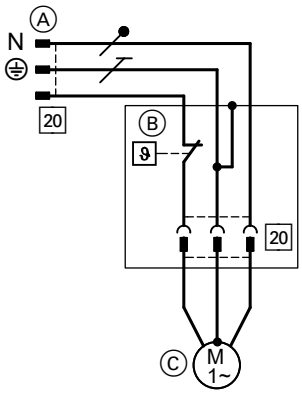

Fig. 49

Ⓐ Connect plug 20 to the extension kit.
Ⓑ Temperature limiter
Ⓒ Heating circuit pump M3/HC3

Expansion PCB on main PCB (operational components 230 V~)

Information regarding the connection values

- *The specified output is the recommended connected load.*
- *The total output of all components connected directly to the heat pump control unit (e.g. pumps, valves, message facilities, contactors) must not exceed 1000 W.*
  If the total output is < 1000 W, the individual rating of a component (e.g. pump, valve, message facility, contactor) can be greater than specified. However, the breaking capacity of the corresponding relay must not be exceeded.
- *The stated current indicates the max. switching current of the switching contact (observe the total current of 5 A).*
- *Controls for external heat source and central fault messages are unsuitable for safety LV.*

Set the required parameters during commissioning; see from page 73.

Plug 222

Terminals	Function	Explanation
222.1	Control of mixer motor for external heat generator Signal mixer CLOSE	Connection values: ▪ Output: 10 W ▪ Voltage: 230 V~ ▪ Max. switching current: 0.2(0.1) A
222.2	Control of mixer motor for external heat generator Signal mixer OPEN	Connection values: ▪ Output: 10 W ▪ Voltage: 230 V~ ▪ Max. switching current: 0.2(0.1) A

Heat pump control unit electrical connections (cont.)

Plug 222		
Terminals	**Function**	**Explanation**
222.3 222.4	Control of external heat generators and 1 high limit safety cut-out each (on site, max. 70 °C), to switch off or switch between the following components: Central heating: ▪ Secondary pump, heat pump ▪ External heat generator DHW reheating: ▪ 3-way diverter valve "Central heating/DHW heating"	Floating contact ***Note*** ▪ *The switching contact is a floating N/O contact that is closed when a heat demand is issued.* ▪ *Never route low voltage via this contact. For that, a relay must be fitted on site.* ▪ *The boiler water temperature sensor in the external heat generator (plug F20) must capture the average temperature of the external heat generator.* Connection values (contact load): ▪ Voltage: 230 V~ ▪ Max. switching current: 4(2) A Connect the high limit safety cut-out: Central heating ▪ In series to the secondary pump (connection 211.2) ▪ In series for controlling external heat generators DHW reheating ▪ In series to the circulation pump for cylinder heating (connection 211.4)

High limit safety cut-out for heat pump in conjunction with an external heat source

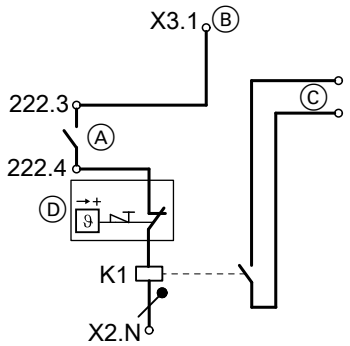

Fig. 50

Ⓐ Terminals on extension PCB
Ⓑ Move jumper from X3.1 to 222.3
Ⓒ Connection on the external heat source at terminals for external demand
Ⓓ High limit safety cut-out (max. 70 ºC) as heat pump protection
K1 Relay; sizing in accordance with the external heat source; observe safety instructions

Heat pump control unit electrical connections (cont.)

Plug 223		
Terminals	**Function**	**Explanation**
223.1 223.2	Central fault message	Floating contact: ▪ Closed: Fault ▪ Open: No fault ▪ Not suitable for safety LV Connection values (contact rating): ▪ Voltage: 230 V~ ▪ Max. switching current: 4(2) A

Central fault message

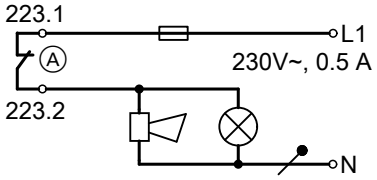

Fig. 51

Ⓐ Terminals on extension PCB

Plug 224		
Terminals	**Function**	**Explanation**
224.4	Instantaneous heating water heater switching, stage 2	Connection values: ▪ Output: 10 W ▪ Voltage: 230 V~ ▪ Max. switching current: 4(2) A See installation instructions for "instantaneous heating water heater" and "instantaneous heating water heater switching module".
224.6	▪ Cylinder loading pump (DHW side) **and** ▪ 2-way shut-off valve	Connection values: ▪ Output: 130 W ▪ Voltage: 230 V~ ▪ Max. switching current: 4(2) A Connect cylinder loading pump and 2-way shut-off valve in parallel.
224.7	▪ Circulation pump for DHW reheating **or** ▪ Immersion heater switching (for connection, see drawing in chapter "Immersion heater")	Connection values: ▪ Output: 100 W ▪ Voltage: 230 V~ ▪ Max. switching current: 4(2) A

Heat pump control unit electrical connections (cont.)

Immersion heater EHE 400 V~

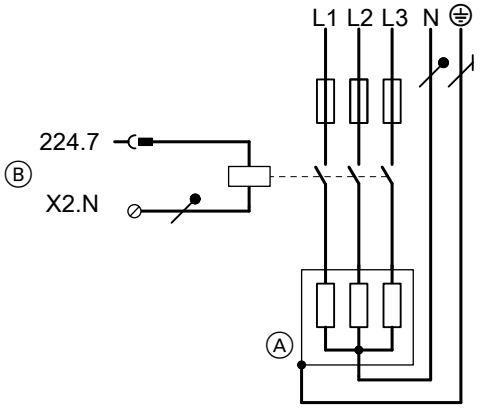

Fig. 52

Ⓐ Immersion heater EHE, power supply 3/N/PE 400 V/50 Hz
Ⓑ Terminals of the heat pump control unit

Plug 225		
Terminals	**Function**	**Explanation**
225.1 M2	Heating circuit pump of the heating circuit with mixer M2/HC2	Connect a temperature limiter to restrict the maximum temperature for underfloor heating circuits (if installed) in series. Connection values: ▪ Output: 100 W ▪ Voltage: 230 V~ ▪ Max. control current: 4(2) A
225.2 M2	Mixer motor control, heating circuit M2/HC2 Signal mixer CLOSE ▼	Connection values: ▪ Output: 10 W ▪ Voltage: 230 V~ ▪ Max. control current: 0.2(0.1) A
225.3 M2	Mixer motor control, heating circuit M2/HC2 Signal mixer OPEN ▲	Connection values: ▪ Output: 10 W ▪ Voltage: 230 V~ ▪ Max. control current: 0.2(0.1) A

Cross connect PCB

Set the required parameters during commissioning; see from page 73.

Signal and safety connections

Terminals	**Function**	**Explanation**
F1	Fuse 6.3 A (slow)	
X1	Earth conductor X1.⏚	Terminals for earth conductors of **all** associated system components
X2	Neutral conductor X2.N	Terminals for neutral conductors of **all** associated system components

Heat pump control unit electrical connections (cont.)

Terminals	Function	Explanation
X3	▪ Power supply terminals of control unit "L1" and auxiliary components ▪ Switched phase L1: X3.1, X3.2, X3.3, X3.7, X3.11, X3.13	Terminals for signal and safety connections ***Note*** *Switched phase can be used for on-site system components. Observe max. output.*
X3.1	Switched phase	
X3.2 X3.14 or at external H1 extension	"External blocking" signal (external blocking of compressor and pumps, mixer in control mode or CLOSE) ***Note*** *The system may no longer be protected against frost.*	Requires floating **N/O** contact: ▪ Closed: Blocking enabled ▪ Open: No blocking ▪ Breaking capacity 230 V~, 2 mA ***Note*** ▪ *These and further external functions, such as swimming pool heating, cascade or external set value default can alternatively be connected via external H1 extension.* *"External H1 extension" installation instructions* ▪ *If a swimming pool heating facility is connected to external H1 extension, **no** other external function can be connected to external H1 extension.*
X3.6 X3.7	Power-OFF	Requires floating **N/C** contact: ▪ Closed: No blocking (safety chain continuous) ▪ Open: Blocking enabled ▪ Breaking capacity 230 V~, 0.15 A No jumper should be installed if a power-OFF contact is connected. ***Note*** ▪ *No parameters need to be set.* ▪ *As soon as the contact opens, the compressor is "forced" OFF.* ▪ *The power-OFF contact signal causes the supply voltage to the relevant components to be switched off (subject to power supply utility).* ▪ *For the instantaneous heating water heater, the stages to be switched off can be selected (parameter **"Output for instant. heating water heater at power-OFF"**).* ▪ *The power supply for the heat pump control unit (3 x 1.5 mm^2) and the cable for the power-OFF signal can be combined in a single 5-core cable.* ▪ *For further information regarding power-OFF, see chapter "Power supply".*

Heat pump control unit electrical connections (cont.)

Terminals	Function	Explanation
X3.8 X3.9	Contact humidistat **or** Jumper	Requires floating contact: ▪ Closed: Safety chain has continuity. ▪ Open: Safety chain interrupted; heat pump shut down. ▪ Breaking capacity 230 V~, 0.15 A Connect on site: ▪ Connected in series, if both safety components are installed. ▪ **Insert jumper if no safety components are installed.**
X3.10 X3.11	Fault message, lag heat pump in a cascade **or** Jumper	Requires floating contact: ▪ Closed: No faults ▪ Open: Fault ▪ Breaking capacity 230 V~, 0.15 A No jumper should be installed if a message contact is connected.
X3.12 X3.13 or at external H1 extension	"External demand" signal (external starting of compressor and pumps, mixer in control mode or OPEN, changeover of operating status for several system components)	Requires floating **N/O** contact: ▪ Closed: Demand ▪ Open: No demand ▪ Breaking capacity 230 V, 2 mA ***Note*** ▪ *These or other external functions, such as swimming pool heating, cascade or external set value default can alternatively be connected via external H1 extension.* *"External H1 extension" installation instructions* ▪ *If a swimming pool heating facility is connected to external H1 extension, **no** other external function can be connected to external H1 extension.*
X3.17 X3.18	MCB/fuse F1 6.3 A (slow)	
X5/X7	Control cable 230 V~	Terminals for connecting cable to the control panel

Controller and sensor PCB (sensors)

Set the required parameters during commissioning; see from page 73.

Note
- ***Plug F11:***
  Nothing *should be connected to plug F11 on site.*
- ***Flow temperature sensor for heating circuit with mixer (M3):***
  The flow temperature sensor for one heating circuit with mixer (M3) is connected to the mixer extension kit (accessories).

Plug	Sensors/terminals	Type (PTC)
F0	Outside temperature sensor	Ni500
F4 (X5.6/X5.7)	Buffer temperature sensor	Pt500

5692878

Heat pump control unit electrical connections (cont.)

Plug	Sensors/terminals	Type (PTC)
F6 (X6.1/X6.2)	Cylinder temperature sensor, top	Pt500
F7 (X6.1/X6.3)	Cylinder temperature sensor, bottom	Pt500
F8 (X5.8/X5.9)	Secondary circuit flow temperature sensor **Type AWHI 351.A**: Connected at the factory **Type AWHO 351.A**: Connect on site; fit inside the building within the secondary circuit flow (lead with plug 2.0 m long, extend on site, if required)	Pt500
F12	Flow temperature sensor, heating circuit with mixer M2	Ni500
F13	System flow temperature sensor (with sensor well, downstream of the heating water buffer cylinder)	Pt500
F20 (X6.8/X6.9)	Boiler water temperature sensor, external heat generator	Pt500
145	KM-BUS Wires interchangeable; for several appliances, use the KM-BUS distributor (accessories). ▪ Extension kit for heating circuit with mixer M3 ▪ Vitotrol 200-A remote control (set the heating circuit assignment at the remote control) ▪ External H1 extension ▪ Vitocom 100 communication interface ▪ Vitosolic 100/200 solar control units	
X5/X6	Terminals for connecting lead (LV) to the heat pump control panel: See page 43)	
X24	Connection for LON communication module: See LON communication module installation instructions	
X31	Slot for coding card: See page 45)	

Swimming pool heating

Note

- *Swimming pool heating is switched via external H1 extension with KM-BUS.*
- *Make connections at external H1 extension **only** in accordance with the following diagram.*
- *Connect **only** circulation pump for swimming pool heating (F) to plug 50 according to the following diagram. A filter circuit pump must be connected separately.*
- *If the components for swimming pool heating are connected to the external H1 extension, **no** other external function (e.g. operating status changeover) can be connected.*

Heat pump control unit electrical connections (cont.)

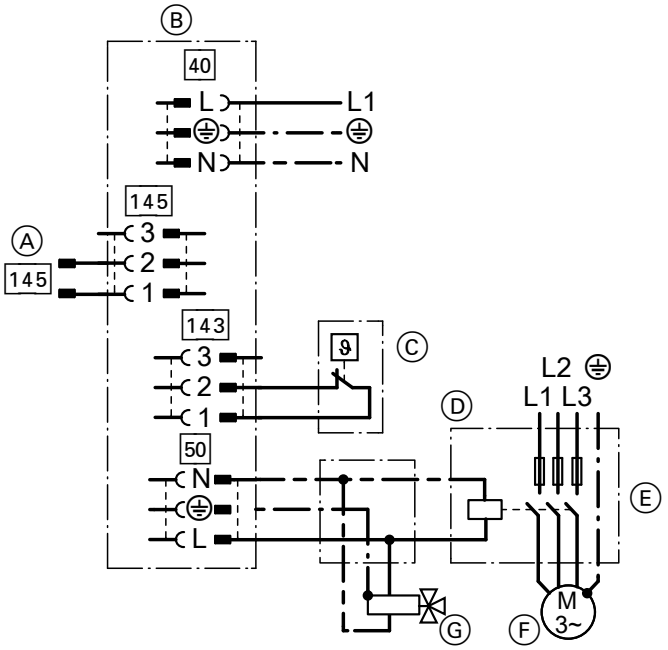

Fig. 53

Ⓐ Connection to controller and sensor PCB
Ⓑ External H1 extension
Ⓒ Temperature controller for regulating swimming pool temperature (floating contact, 230 V~, 0.1 A, accessories)
Ⓓ Junction box (on site)
Ⓔ Fuses and contactor for circulation pump for swimming pool heating (accessories)
Ⓕ Circulation pump for swimming pool heating (accessories)
Ⓖ 3-way diverter valve "Swimming pool" (zero volt: Charging the heating water buffer cylinder)

Cascade control via KM BUS

Make connections to external extension H1 **only** according to the following diagram.

Heat pump control unit electrical connections (cont.)

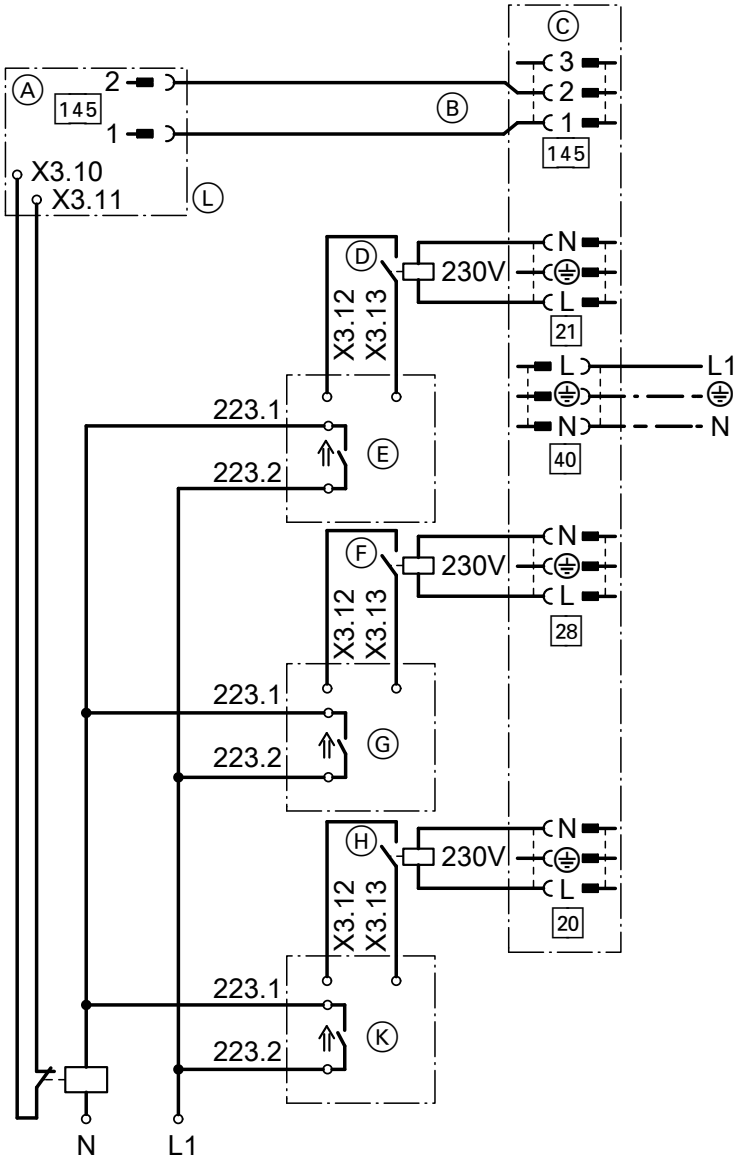

Fig. 54

Ⓐ Heat pump 1 (lead heat pump)
Ⓑ KM BUS
Ⓒ External extension H1
Ⓓ Floating contact "External demand "
Ⓔ Lag heat pump 1
Connection at contact for "External demand "
Ⓕ Floating contact "External demand "
Ⓖ Lag heat pump 2
Connection at contact for "External demand "
Ⓗ Floating contact "External demand "
Ⓚ Lag heat pump 3
Ⓛ Central fault message input, lag heat pump
N/C contact X3.10 / X3.11 triggers a message.

Power supply

Isolators for non-earthed conductors

- Install an isolator in the power cable to provide omnipolar separation from the mains for all active conductors, corresponding to overvoltage category III (3 mm) for full isolation. This isolator must be fitted in the permanent electrical installation in line with installation requirements, e.g. mains isolator or upstream circuit breaker.
- We additionally recommend installing an AC/DC-sensitive RCD (RCD class B) for DC (fault) currents that can occur with energy efficient equipment.

Danger
Incorrect electrical installations can lead to serious injury from electrical current and result in appliance damage.

Connect the power supply and implement all safety measures (e.g. RCD circuit) in accordance with the following regulations:
- IEC 60364-4-41
- VDE regulations
- Technical connection requirements specified by the local power supply utility

Danger
The absence of system component earthing can lead to serious injury from electrical current and component damage in the event of an electrical fault.
The appliance and pipework must be connected to the equipotential bonding of the building.

Danger
Incorrect core assignment can lead to serious injury from electrical current and result in appliance damage.
Never interchange cores "L" and "N".

- Consult your power supply utility, which may offer different supply tariffs for the power circuits.
  Observe the technical connection requirements of the power supply utility.
- If the compressor and/or instantaneous heating water heater (if installed) are operated at an economy tariff (power-OFF), provide an additional cable (e.g. 3 x 1.5 mm^2) for the power-OFF signal from the distribution board (meter box) to the heat pump control unit.
  or
  Combine the cable for the power-OFF signal and for the heat pump control unit power supply (3 x 1.5 mm^2) in a single 5-core cable.
- The assignment of the power-OFF (for compressor and/or instantaneous heating water heater) occurs via the type of connection and via parameter setting in the heat pump control unit.
  In Germany, the power supply can be cut for a maximum of 3 x 2 hours per day (24 h).
- The **heat pump control unit/PCB** must be supplied **without** power-OFF. Tariffs subject to possible shutdown must not be used here.
- Protect the power cable for the heat pump control unit with an MCB/fuse of max. 16 A.
- For accessories and external components that will not be connected to the heat pump control unit, provide the power supply via the same MCB/fuse, or at least on the same phase, as the heat pump control unit.
  Connection to the same MCB/fuse provides additional safety in the event of the power being switched off. Observe the power consumption of the connected consumers.
- If the mains connection is made with a flexible power cable, it must be ensured that the live conductors are pulled taut before the earth conductor in the event of strain relief failure. The length of the earth conductor wire will depend on the design.

Information regarding the compressor power supply

- **Please note**
  Incorrect phase sequence can cause damage to the appliance.
  Make the compressor power supply **only** in the phase sequence specified (see terminals) with a **clockwise** rotating field.
- Characteristics of the mains fuses for the compressor: See "Specification".

Power supply (cont.)

Heat pump control unit power supply 230 V~

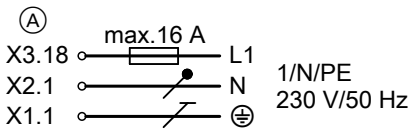

Fig. 55

Ⓐ Mains terminals inside the heat pump control unit

Note
*This supply must **never** be blocked.*

- Max. fuse rating 16 A
- Standard tariff: No economy tariff with power-OFF possible for the heat pump control unit
- Recommended power cable: 3 x 1.5 mm^2
- Recommended power cable with power-OFF for compressor/instantaneous heating water heater: 5 x 1.5 mm^2

Compressor power supply (400 V~), sealing economy tariff connection for compressor

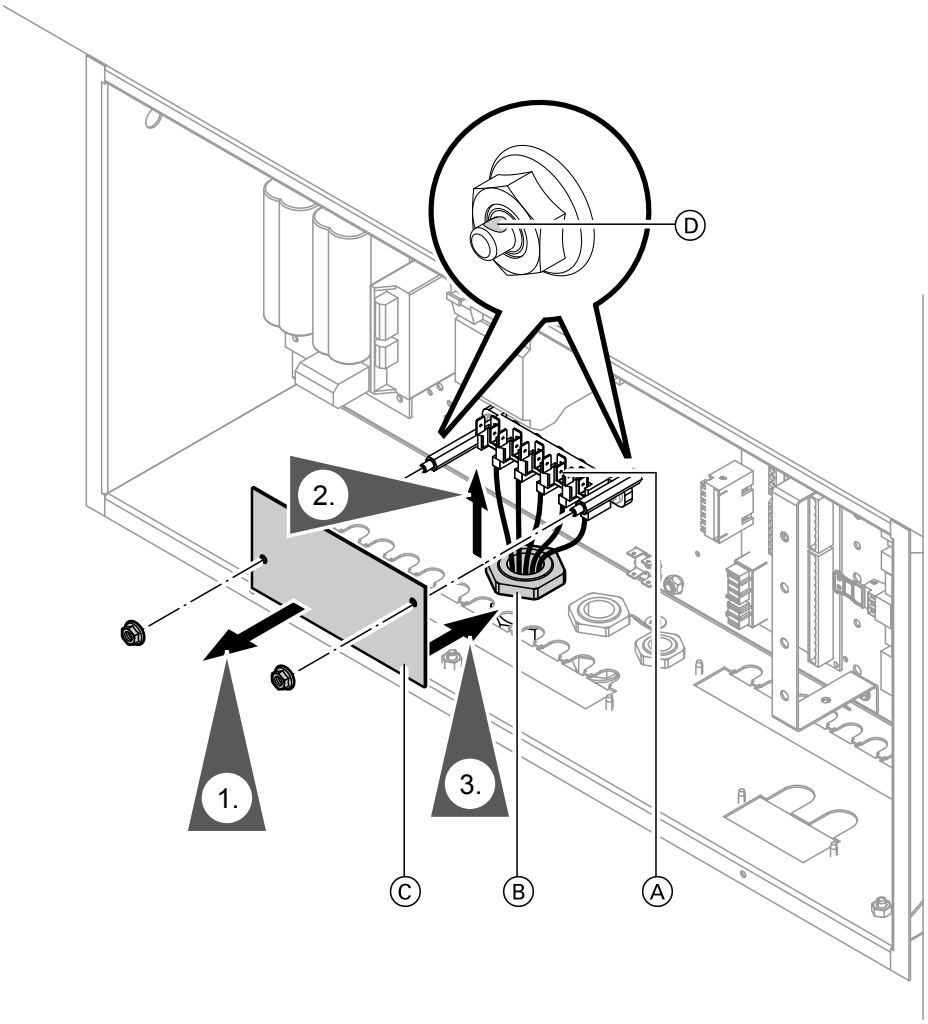

Fig. 56

1. Undo screws on contact shield Ⓒ.
2. Route 400 V~ power cable through cable fitting Ⓑ and apply strain relief.

Power supply (cont.)

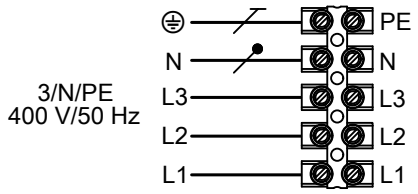

Fig. 57

- On-site fuse protection in accordance with the compressor rating (see specification).
  Note
  The upstream MCBs must have B characteristics.
- No parameters need to be set when using economy tariff with power-OFF. The compressor is shut down during the power-OFF time.
- Recommended power cable: 5 x 2.5 mm^2, flexible

3. Connect the wires to mains terminal Ⓐ in the control panel.
4. Secure contact shield Ⓒ with screws.
5. If a seal is required (e.g. when using an economy tariff with power-OFF), pass the seal wire through the holes Ⓓ drilled in both studs.

Power supply with power-OFF

Power-OFF without on-site load disconnection

The power-OFF signal is connected directly to the heat pump control unit. An active power-OFF shuts down the compressor "hard".
Parameter **"Output for instant. heating water heater at power-OFF 790A"** determines whether and at what stage the instantaneous heating water heater (accessory) stays operational.

Service instructions, Vitotronic 200 heat pump control unit

Note
Observe the technical connection conditions of the relevant power supply utility.

Power supply (cont.)

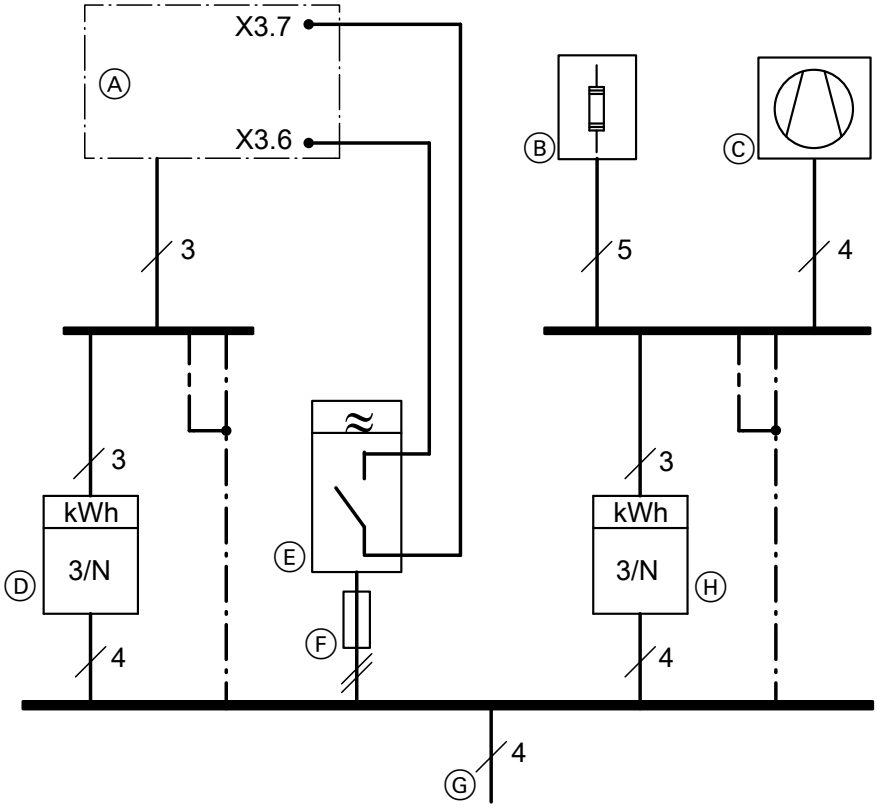

Fig. 58 Diagram excluding fuses and RCD.

Ⓐ Heat pump control unit (terminals on the cross connect PCB)
Ⓑ Instantaneous heating water heater (accessory)
Ⓒ Compressor (fan is directly coupled to the compressor power supply)
Ⓓ High tariff meter
Ⓔ Ripple control receiver (contact open: power-OFF enabled)
Ⓕ Backup fuse ripple control receiver
Ⓖ TNC system feed
Ⓗ Economy tariff meter

Power-OFF with on-site load disconnection

The power-OFF signal is connected to the on-site contactor of the economy tariff power supply and in the heat pump control unit. An active power-OFF shuts down the compressor **and** the instantaneous heating water heater (accessory) "hard".

Note
Observe the technical connection conditions of the relevant power supply utility.

Power supply (cont.)

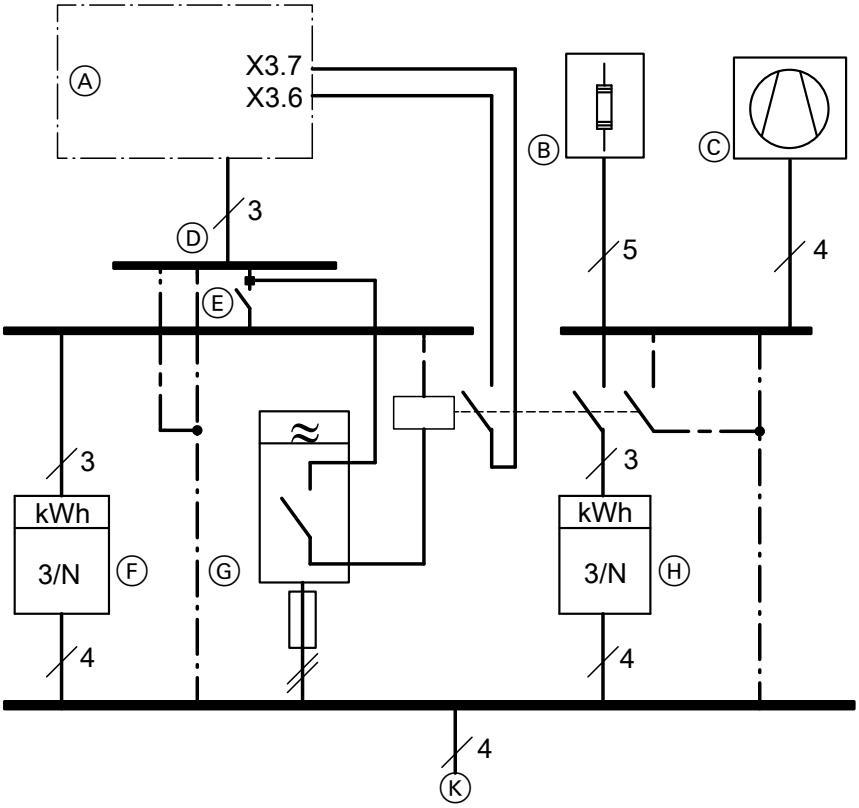

Fig. 59 Diagram excluding fuses and RCD.

- Ⓐ Heat pump control unit (terminals on the cross connect PCB)
- Ⓑ Instantaneous heating water heater (accessory)
- Ⓒ Compressor (fan is directly coupled to the compressor power supply)
- Ⓓ Power supply, control unit
- Ⓔ Main isolator
- Ⓕ High tariff meter
- Ⓖ Ripple control receiver (contact open: power-OFF enabled) with backup fuse
- Ⓗ Economy tariff meter
- Ⓚ TNC system feed

Phase monitor (if installed)

- The phase monitor monitors the compressor power supply.
- If the internal tolerance range is exceeded or undershot, the phase monitor interrupts the safety chain via a floating contact. The compressor stops.
- The phase monitor automatically re-enables the compressor power supply if the values return to within the specified tolerance range. **No** reset required.

Note
If the phase monitor has responded, check the power supply and remove the cause of the fault.

Power supply (cont.)

Version 1

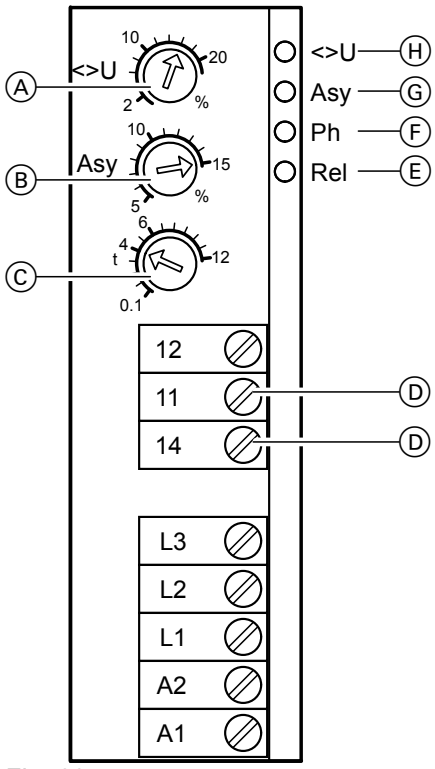

Fig. 60

Ⓐ Over/undervoltage in %
Ⓑ Phase asymmetry in %
Ⓒ Switching delay in s
Ⓓ Contact used in safety chain (N/O contact)
Ⓔ ON/OFF indicator ("Rel")
Ⓕ Fault indicator, phase failure/phase sequence "Ph"
Ⓖ Fault indicator, asymmetry "Asy"
Ⓗ Fault indicator, over/undervoltage "<>U"

LEDs explained in Fig. 60
- "Rel" illuminates green:
  All voltages and the rotating field (clockwise) are OK.
- "Ph" illuminates red:
  Relay has responded. Rotating field is anti-clockwise.
- All LEDs off:
  One or more phases have dropped out.
- "<>U" illuminates red:
  Incorrect voltage on one or more phases
- "Asy" illuminates red:
  Asymmetry on one or more phases

Version 2

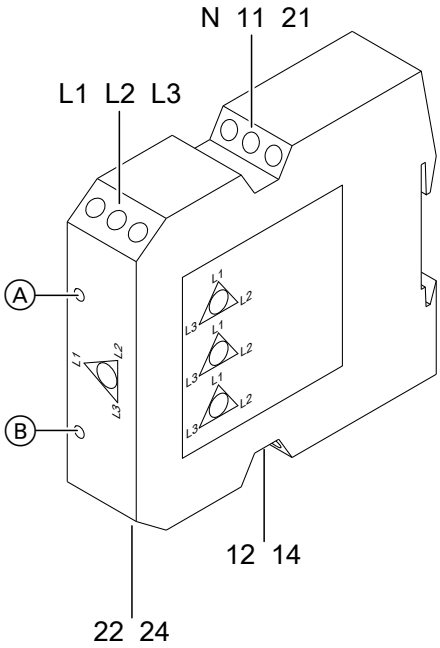

Fig. 61

LEDs explained in Fig. 61
Ⓐ Voltage "U":
- Illuminates green if voltage is present.

Ⓑ Relay "R":
- Illuminates yellow if the phase sequence is correct.
- Does not illuminate if the phase sequence is incorrect.

Power supply (cont.)

Version 3

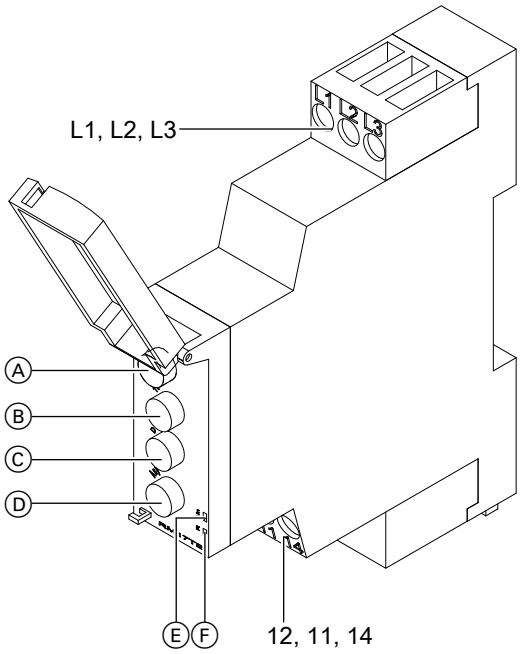

Fig. 62

Ⓐ Voltage range
Ⓑ Delay in s "Tt"
Ⓒ Over/undervoltage in % "ΔU"
Ⓓ Phase asymmetry in % "Asy"

LEDs explained in Fig. 62

Ⓔ Voltage "Un":
- Illuminates green if voltage is present.

Ⓕ Relay "R":
- Illuminates yellow if the phase sequence is correct.
- Does not illuminate if the phase sequence is incorrect.
- Flashes yellow during delay "Tt".

Closing the heat pump

! **Please note**
Leaking hydraulic connections lead to appliance damage.
- Check for leaks in the internal and on-site hydraulic connections.
- In the event of leaks, switch off the appliance immediately. Drain off liquid via the drain valve. Check the seating of seal rings. **Always** replace displaced seal rings.

! **Please note**
If a casing door is not securely closed this can lead to damage from condensation, vibrations and excessive noise.
Seal the casing door so it is soundproof and diffusion-proof.

⚠ **Danger**
The absence of system component earthing can lead to serious injury from electrical current and component damage in the event of an electrical fault.
Always remake all earth connections.
The appliance and pipework must be connected to the equipotential bonding of the building.

Closing the heat pump (cont.)

Closing the control panel

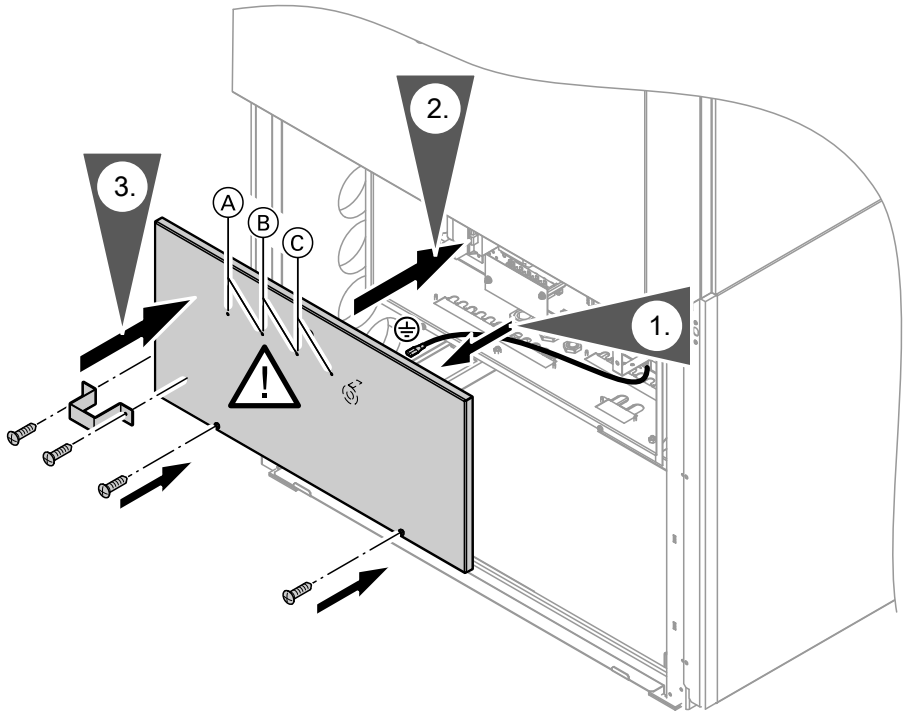

Fig. 63

Ⓐ Holes for type AWHI/AWHO 351.A120
Ⓑ Holes for type AWHI/AWHO 351.A114
Ⓒ Holes for type AWHI/AWHO 351.A110

Closing the heat pump (cont.)

Fitting the front panel

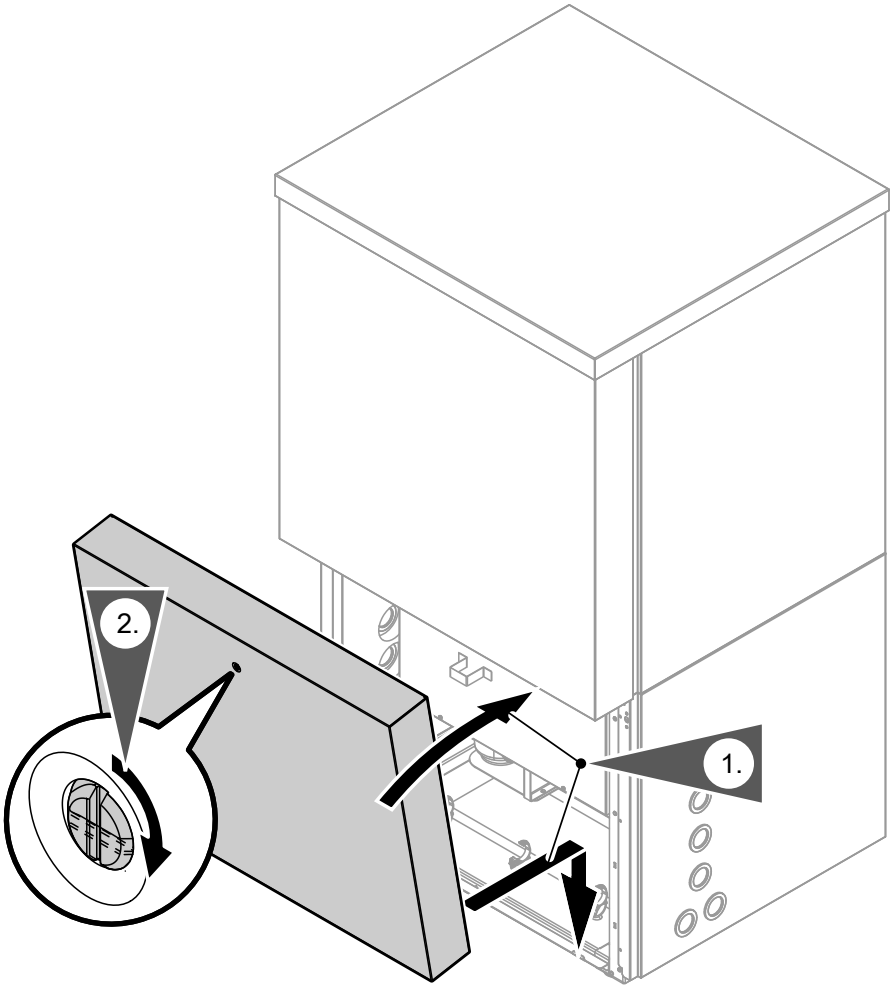

Fig. 64

Steps - commissioning, inspection and maintenance

Commissioning steps
Inspection steps
Maintenance steps

				Page
•	•	•	**1. Opening the heat pump**	68
•			**2. Compiling reports**	69
	•	•	**3. Checking the refrigerant circuit for leaks**	69
•	•	•	**4. Filling and venting on the secondary side**	70
•	•	•	**5. Checking the expansion vessel and heating circuit pressure**	71
		•	**6. Cleaning the interior**	71
•	•		**7. Checking the electrical connections for firm seating**	
		•	**8. Checking the compressor casing temperature**	72
•			**9. Commissioning the system**	73
•	•	•	**10. Closing the control panel, heat pump and heat pump control unit**	
•			**11. Instructing the system user**	79

5692878

Opening the heat pump

Danger
Contact with live components can lead to serious injury from electric current.
- **Do not touch** the connections in the control panel (see chapter "Overview of connections in the control panel").
- When working on the appliance, isolate the system from the power supply, e.g. at a separate MCB/fuse or a mains isolator. Check the system is no longer 'live' and safeguard against reconnection.
- Prior to working on the appliance, wait at least 4 min until the voltage has completely dropped out.

Danger
The absence of system component earthing can lead to serious injury from electrical current and component damage in the event of an electrical fault.
All earth connectors **must** be reconnected.
The appliance and pipework must be connected to the equipotential bonding of the building.

Please note
Commissioning immediately after installation can lead to appliance damage.
Wait **at least 30 min** between installing and commissioning the appliance.

Please note
Refrigerant can escape when working on the refrigerant circuit.
Work on the refrigerant circuit must **only** be carried out by a certified contractor (in accordance with EC 842/2006 and 303/2008).

1. Remove the front panels in reverse order; see page 66.
2. If required, the control panel can be pivoted to the side (see page 69).
3. When work is complete, close the heat pump in reverse order.

For commissioning this appliance, see also the operating instructions.

Opening the heat pump (cont.)

Pivoting control panel to the side

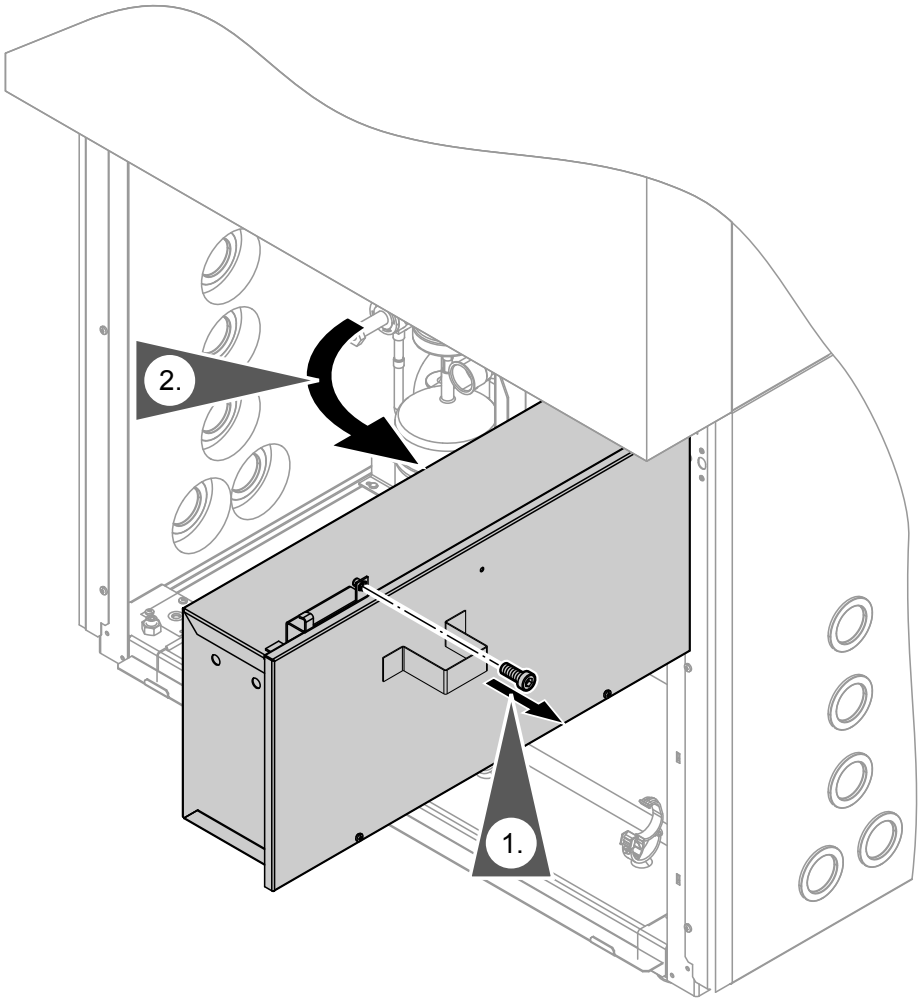

Fig. 65

Compiling reports

Enter the readings taken during commissioning (described hereafter) into the reports on page 128 onwards.

Checking the refrigerant circuit for leaks

Danger
The refrigerant is a non-poisonous gas that displaces air. Unregulated escape of refrigerant in enclosed spaces can lead to breathing difficulties and suffocation.
- Ensure adequate ventilation in enclosed spaces.
- Always observe regulations and guidelines on handling this type of refrigerant.

Danger
Direct contact with refrigerant can be harmful to skin.
Wear safety goggles and protective gloves when working on the refrigerant circuit.

Checking the refrigerant circuit for leaks (cont.)

! **Please note**
Refrigerant can escape when working on the refrigerant circuit.
Work on the refrigerant circuit must **only** be carried out by a certified contractor (in accordance with EC 842/2006 and 303/2008).

Check the floor area, valves and all visible solder joints for traces of oil.

Note
Traces of oil indicate a leak in the refrigerant circuit. Have your heat pump checked over by a refrigeration engineer.

Filling and venting on the secondary side

Unsuitable fill and top-up water increases the level of deposits and corrosion. This can lead to system damage.
Observe VDI 2035 regarding quality and amount of heating water, including fill and top-up water.

- Flush the heating system thoroughly before filling.
- Only fill with water of potable quality.
- If the fill and top-up water has a water hardness greater than 16.8 °dH (3.0 mol/m^3), it must be softened, e.g. using the small softening system for heating water: See the Vitoset pricelist.

! **Please note**
Escaping liquids can lead to electrical defects. Protect electrical components of the heat pump from escaping liquids.

Note
Before *filling the system, observe VDI 2035 part 1.*

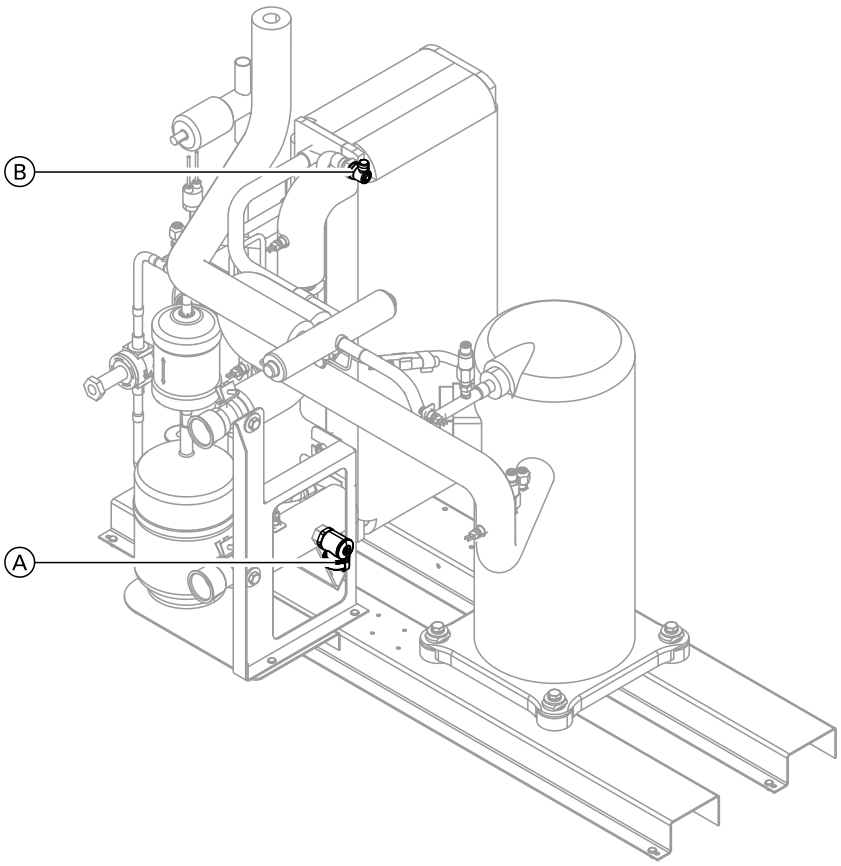

Fig. 66

Ⓐ Drain valve
Ⓑ Manual air vent valve

1. Open any non-return valves installed on site.
2. Check the pre-charge pressure of the expansion vessel (see page 71).
3. Fill the secondary circuit via the on-site BDF valve (flush) and vent the circuit.

5692878

Filling and venting on the secondary side (cont.)

4. Check the system pressure at the pressure gauge. Top up with water if required.
   Minimum system pressure: 0.8 bar (80 kPa)
   Permiss. operating pressure: 3 bar (0.3 MPa)

5. ! **Please note**
   Leaking hydraulic connections lead to appliance damage.
   - Check the internal and on-site hydraulic connections for leaks.
   - In the event of leaks, switch OFF the appliance immediately. Drain off liquid via the drain valve. Check the seating of seal rings. **Always** replace displaced seal rings.

6. Close drain & fill valve.

7. Connect on-site hose to manual air vent valve Ⓑ and open the valve.

8. Close manual air vent valve Ⓑ after venting has been completed.

9. Check the system pressure. Top up with water if required.

Checking the expansion vessel and heating circuit pressure

Carry out this test on a cold system.

Note
Only use anti-corrosion agents that have been approved for heat pumps with DHW heating via single-walled heat exchangers (DHW cylinders).

1. If an on-site shut-off valve is installed, close it. Otherwise drain the heating system on the heating water side until the pressure gauge indicates "0".

2. If the pre-charge pressure of the expansion vessel is lower than the static system pressure, top up with sufficient nitrogen to raise the pre-charge pressure of the expansion vessel by 0.1 to 0.2 bar (10 to 20 kPa) higher than the static system pressure.

   Example:
   Static head (distance between the heat source and the highest heating surface) 10 m
   Equivalent to a static pressure of 1 bar (0.1 MPa).

3. Top up with water until the filling pressure exceeds the pre-charge pressure of the expansion vessel. On a cold system, the charge pressure must be approx. 0.2 bar (20 kPa) higher than the static pressure.

4. During commissioning, mark this value on the pressure gauge as minimum charge pressure.

Cleaning the interior

! **Please note**
Deposits from cleaning agents or chemicals in the interior can cause appliance damage.
Only clean the interior with clean water; maximum temperature 50 °C.

Cleaning the interior (cont.)

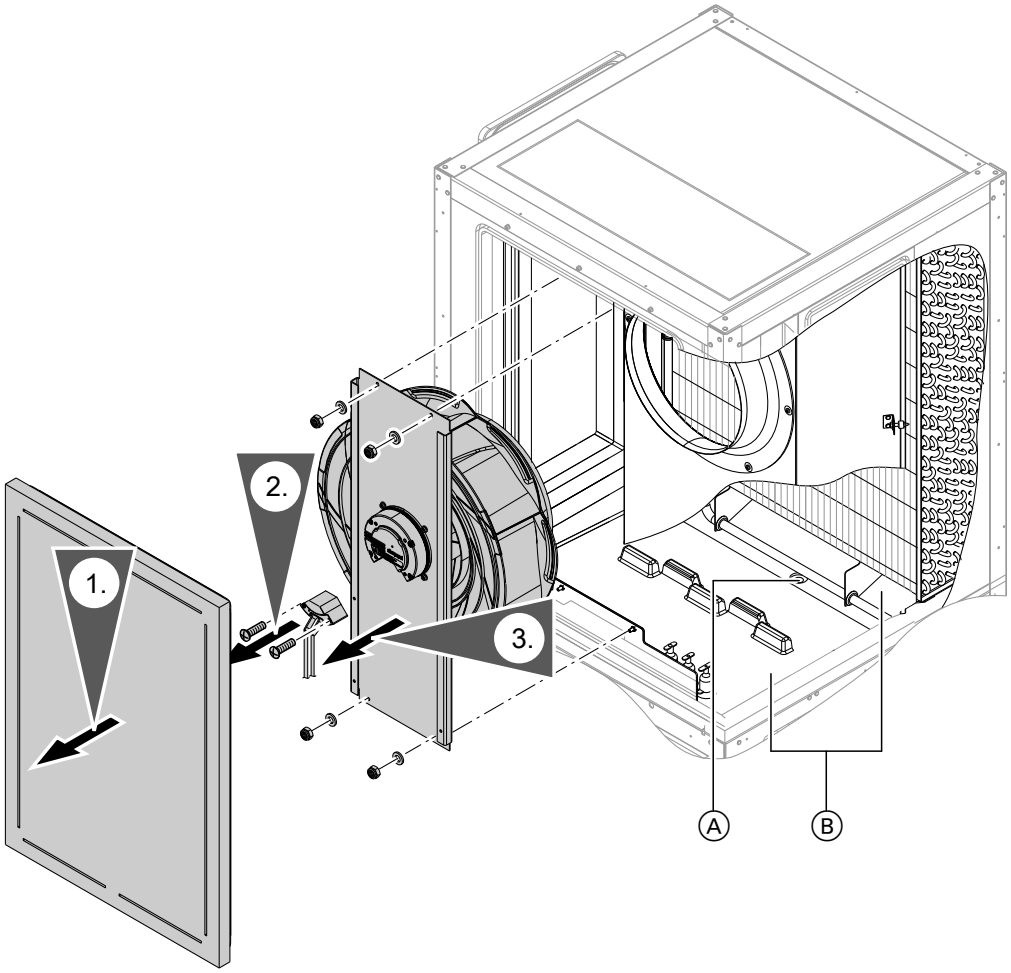

Fig. 67

Ⓐ Condensate drain
Ⓑ Interior

4. Clean the interior with a vacuum cleaner first and then with a hand shower. If necessary, wipe dry with a soft cloth.

5. Check condensate drain.

> **!** **Please note**
> Freezing condensate in the heat pump leads to appliance damage.
> Check that the condensate can drain freely.
> Flush the condensate drain if necessary.

6. Assembly: Steps 1 to 3 in reverse order

Checking the electrical connections for firm seating

Checking the compressor casing temperature

1. Switch ON the heat pump and operate it for at least 10 min.

Checking the compressor casing temperature (cont.)

2. Measure the temperature of the compressor casing exterior while it is in operation.
   The compressor must not develop a layer of ice on its outside, and the casing must not get hotter than 60 °C (if necessary, check with Viessmann technical service).

Commissioning the system

Commissioning (configuration, parameter settings and function check) can be carried out with or without the commissioning wizard (see following chapter and service instructions for the heat pump control unit).

Note
The type and extent of the parameters depend on the appliance type, on the selected system scheme and the accessories employed.

Commissioning with the commissioning assistant

The commissioning assistant automatically guides you through all the menus where settings have to be made. For this, "Coding level 1" is automatically active.

! **Please note**
Incorrect operation at "Coding level 1" may result in damage to the appliance and the heating system.
Observe the service instructions for the "Vitotronic 200", otherwise the appliance warranty will be void.

Switch ON the ON/OFF switch on the control unit.

- The prompt **"Start commissioning?"** appears **automatically** on commissioning.
  Note
  *The commissioning assistant can also be started **manually**:*
  To do this, press and hold ≡ when switching on the control unit (progress bar visible).
- When the unit is first commissioned, the display is in German.

Fig. 68

- Manually switching some appliance components during commissioning enables the control unit to display messages. These messages are not appliance faults.

Commissioning the system (cont.)

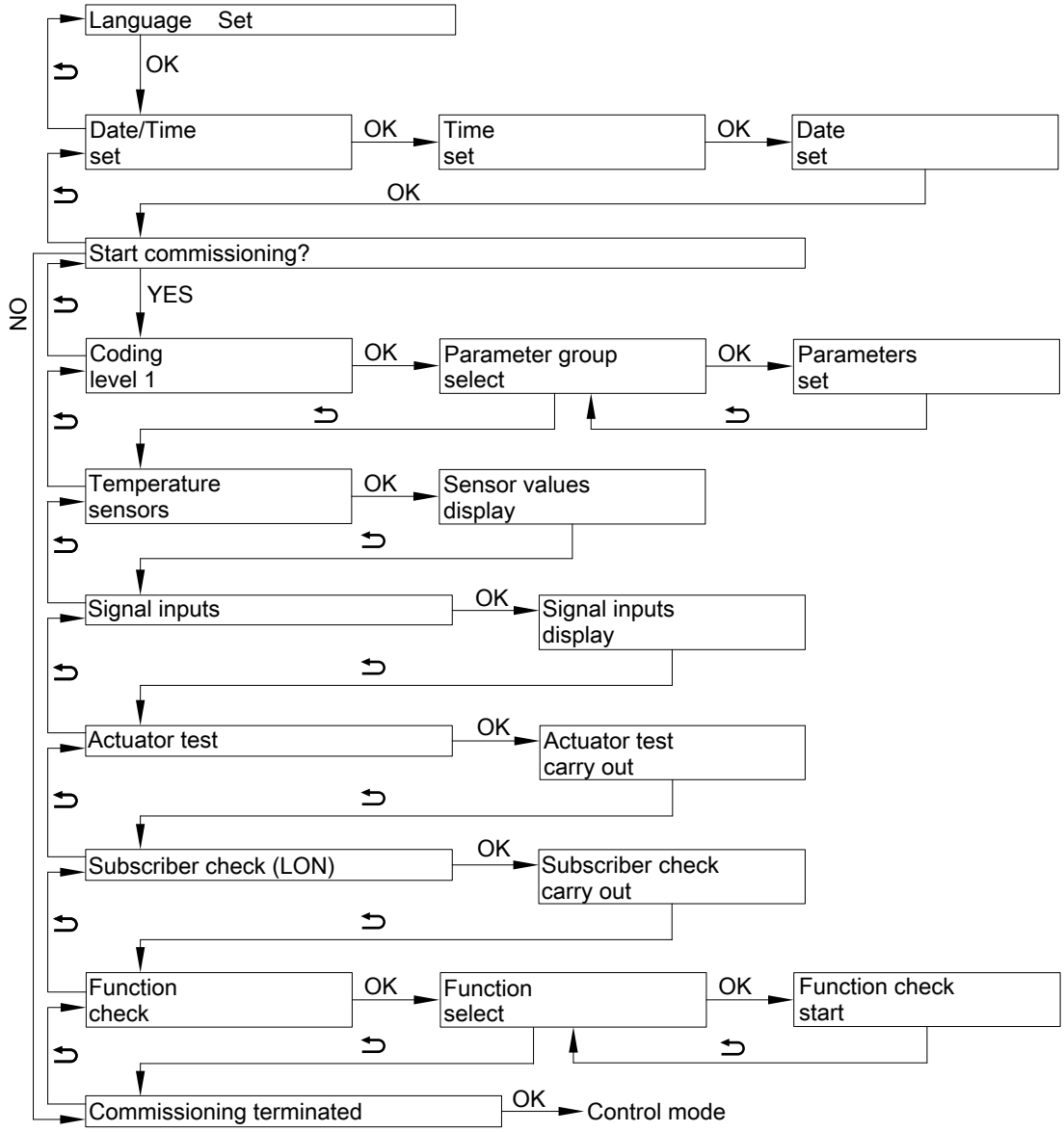

Fig. 69

Commissioning without the commissioning assistant

Activating the service menu

The service menu can be activated from any other menu.
Press and hold **OK** + ≡: simultaneously for approx. 4 s.

Deactivating the service menu

The service menu remains active until it is disabled with **"Terminate service?"**, or if no key is pressed for 30 min.

Setting parameters using "System scheme 7000" as an example

To set a parameter, first select the parameter group and then the parameter.

Service menu:

1. Press and hold **OK** + ≡: simultaneously for approx. 4 s.
2. Select **"Coding level 1"**.
3. Select parameter group: **"System definition"**
4. Select parameter: **"System scheme 7000"**
5. Set a system scheme: e.g. **"6"**

Alternatively, if the service menu was already active:

Extended menu:

1. ≡:

5692878

Commissioning the system (cont.)

2. **"Service"**
3. Select **"Coding level 1"**.
4. Select parameter group: **"System definition"**
5. Select parameter: **"System scheme 7000"**
6. Set a system scheme: e.g. **"6"**

Required parameters for components connected on site

Detailed explanation of parameters
"Vitotronic 200" heat pump control unit service instructions

Overview of possible system schemes

The following table provides an overview of **all** possible system schemes.

Component	System scheme (parameter 7000)											
	0	1	2	3	4	5	6	7	8	9	10	11
Heating circuit												
A1	–	X	X	–	–	X	X	–	–	X	X	–
M2	–	–	–	X	X	X	X	X	X	X	X	–
M3	–	–	–	–	–	–	–	X	X	X	X	–
DHW cylinder												
	X	–	X	–	X	–	X	–	X	–	X	–
Heating water buffer cylinder												
	–	○	○	X	X	X	X	X	X	X	X	–
External heat generator												
	○	○*1	○*1	○	○	○	○	○	○	○	○	–
Instantaneous heating water heater												
	○	○	○	○	○	○	○	○	○	○	○	–
Swimming pool												
	–	○	○	○	○	○	○	○	○	○	○	–
Solar thermal system (with Vitosolic)												
	–	–	○	–	○	–	○	–	○	–	○	–

X Component selected.
○ Component may be added.

Pumps and other components

Pump/component	Parameter	Setting
Secondary pump (for heating circuit A1 without heating water buffer cylinder; no additional heating circuit pump required)	**"System definition" → "System scheme 7000"**	**"1"** to **"11"**
Heating circuit pump A1 (in conjunction with heating water buffer cylinder in addition to the secondary pump)	**"System definition" → "System scheme 7000"**	With heating circuit without mixer A1
Heating circuit pump and mixer M2	**"System definition" → "System scheme 7000"**	With heating circuit with mixer M2

*1 *Only in conjunction with a heating water buffer cylinder.*

Commissioning the system (cont.)

Pump/component	Parameter	Setting
Heating circuit pump and mixer M3 (controlled via mixer extension kit)	**"System definition" → "System scheme 7000"**	With heating circuit with mixer M3 ***Note*** *Set rotary switch S1 in the extension kit to "2" (see "Mixer extension kit" installation instructions).*
Circulation pump for cylinder heating	**"System definition" → "System scheme 7000"** **"Internal hydraulics" → "Enable 3-way diverter valve heating/DHW 730D"**	With DHW heating **"0"**
DHW heating with cylinder loading system: ▪ Cylinder loading pump ▪ 2-way shut-off valve	**"System definition" → "System scheme 7000"** **"External heat source" → "Enable external heat source for DHW heating 7B0D"**	With DHW heating **"1"**
DHW circulation pump	Extended menu: **"Time prog. DHW circ."**	Setting a time program
Solar thermal system	**"Solar" → "Type solar control unit 7A00"**	▪ **"1"** (with Vitosolic 100) ▪ **"2"** (with Vitosolic 200)
Circulation pump for DHW reheating	**"External heat source" → "Enable external heat source 7B00"** **"External heat source" → "Enable external heat source for DHW heating 7B0D"**	**"1"** **"1"**
Remote control (e.g. Vitotrol 200-A)	**"Heating circuit 1" → "Remote control 2003"** or **"Heating circuit 2" → "Remote control 3003"** or **"Heating circuit 3" → "Remote control 4003"**	**"1"** ***Note*** *Set code on the Vitotrol 200-A to assign heating circuits:* *H1 for heating circuit A1* *H2 For heating circuit M2* *H3 For heating circuit M3* *(see "Vitotrol 200-A" installation instructions)*
Vitocom 100	**"System definition" → "Vitocom 100 7017"**	**"1"**
External H1 extension	**"System definition" → "External extension 7010"**	**"1"** ***Note*** *For parameters for external functions, see the following table.*

Commissioning the system (cont.)

External functions

External function	Parameter	Setting
External demand	If applicable **"Internal hydraulics"** → **"Flow temperature for external demand 730C"**	Set flow temperature for external demand
External starting of the compressor; mixer in control mode or OPEN	**"System definition"** → **"Effect of external demand on heat pump/heating circuits 7014"**	**"0"** to **"7"** (Observe parameter **"Flow temperature for external demand 730C"**)
External changeover of the operating mode of various system components	**"System definition"** → **"System components for external changeover 7011"**	**"0"** to **"10"**
	"System definition" → **"Operating status for external changeover 7012"**	**"0"** to **"3"**
	"System definition" → **"Duration of external changeover 7013"**	**"0"** to **"12"**
External blocking of compressor and pumps	**"System definition"** → **"Effect of external blocking on pumps/compressor 701A"**	**"0"** to **"31"**
External blocking of the compressor; mixer in control mode or CLOSED	**"System definition"** → **"Effect of ext. blocking on heat pump/heating circuits 7015"**	**"0"** to **"8"**
	"System definition" → **"Effect of external blocking on pumps/compressor 701A"**	**"0"** to **"31"**
Central fault message	No parameters need to be set.	

Parameters for instantaneous heating water heater

Parameter		Setting
"Electr booster heater" →		
	"Enable instantaneous heating water heater 7900"	**"1"**
	"Output for instant. heating water heater at power-OFF 790A"	**"1"** 3 kW **"2"** 6 kW **"3"** 9 kW

Enable instantaneous heating water heater for DHW heating

Parameter		Setting
"DHW" →		
	"Enable electric heaters for DHW heating 6015"	**"1"**

Parameters for external heat generators

Parameter		Setting
"External heat source" →		
	"Enable external heat source 7B00"	**"1"**

Commissioning the system (cont.)

Enable external heat source for DHW heating

Parameter		Setting
"External heat source" →		
	"Enable external heat source for DHW heating 7B0D"	**"1"**

Parameters for immersion heater

Parameters		Setting
"DHW" →		
	"Enable electric heaters for DHW heating 6015"	**"1"**
	"Enable booster heaters for DHW heating 6014"	**"1"**

Swimming pool water heating

Parameters for swimming pool water heating	Setting
"System definition" → "External extension 7010"	**"1"**
"System definition" → "Swimming pool 7008"	**"1"**

Cascade via external extension H1

Parameter	Setting	
	Lead heat pump	Lag heat pump
"System definition" → "System scheme 7000"	**"0"** to **"10"**	**"11"**
"System definition" → "External extension 7010"	**"1"**	**"0"**
"System definition" → "Cascade control 700A"	**"1"**	**"0"**
"System definition" → "Number of lag heat pumps in cascade 5735"	**"1"** to **"3"**	–
"System definition" → "Output lag heat pump 700B"	**"0"** to **"255"**	–
"System definition" → "Use of heat pump in cascade 700C"	**"0"** to **"15"**	–
"System definition" → "Flow temperature for external demand 730C"	–	**"0"** to **"700"** (≙ 0 to 70 °C)

Cascade via LON

Parameter	Setting	
	Lead heat pump	Lag heat pump
"System definition" → "System scheme 7000"	**"0"** to **"10"**	**"11"**
"System definition" → "Cascade control 700A"	**"2"**	**"0"**
"System definition" → "Number of lag heat pumps in cascade 5735"	**"1"** to **"4"**	–

5692878

Commissioning the system (cont.)

Parameter	Setting	
	Lead heat pump	Lag heat pump
"System definition" → "Output lag heat pump 700B"	**"0"** to **"255"**	–
"System definition" → "Use of heat pump in cascade 700C"	**"0"** to **"31"**	**"0"** to **"31"**
"System definition" → "Flow temperature for external demand 730C"	–	**"0"** to **"700"** (≙ 0 to 70 °C)
"Communication" → "Heat pump number in cascade (LON) 5707"	–	**"1"** to **"4"** (unique)
"Communication" → "Enable LON communication module 7710"	**"1"**	**"1"**
"Communication" → "LON subscriber number 7777"	**"1"** to **"99"** (unique)	**"1"** to **"99"** (unique)
"Communication" → "LON system number 7798"	**"1"** to **"5"**	**"1"** to **"5"** (as per lead heat pump)
"Communication" → "LON fault manager 7779"	**"1"** to **"99"** (unique)	**"1"** to **"99"** (unique)

Closing the control panel, heat pump and heat pump control unit

Instructing the system user

The system installer should hand the operating instructions to the system user and instruct the user in operating the system.

This includes all components installed as accessories, e.g. remote control units. In addition, the system installer must make the user aware of the required maintenance work.

Repairs

Overview of sensors, drain and air vent valves

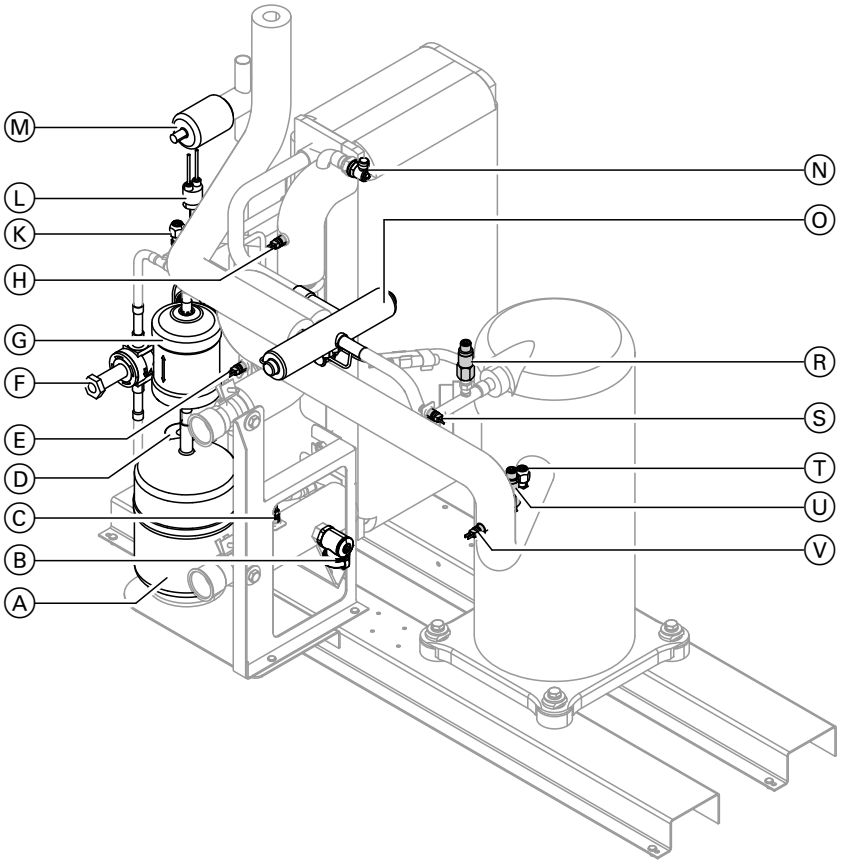

Fig. 70

Ⓐ Refrigerant receiver
Ⓑ Drain valve
Ⓒ Secondary circuit return temperature sensor
Ⓓ Thermostatic expansion valve
Ⓔ Temperature sensor EVI
Ⓕ Solenoid valve
Ⓖ Filter dryer
Ⓗ Secondary circuit flow temperature sensor
Ⓚ Schrader valve, high pressure side
Ⓛ Safety high pressure switch
Ⓜ Electronic expansion valve (EEV)
Ⓝ Manual air vent valve
Ⓞ 4-way diverter valve
Ⓡ High pressure sensor
Ⓢ Hot gas temperature sensor
Ⓣ Schrader valve, low pressure side
Ⓤ Low pressure sensor
Ⓥ Suction gas temperature sensor

Draining the heat pump on the secondary side

1. Close the on-site BDF valve.
2. Drain the heat pump at the drain valve in the secondary circuit flow.

Checking the sensors

- For sensor connections to the controller and sensor PCB, see page 46.
- For the position of the sensors in the heat pump, see diagram on page.

Repairs (cont.)

Sensor	Test element
▪ Outside temperature sensor (F0) ▪ Flow temperature sensor, heating circuits M2 (F12)	Ni500
▪ System flow temperature sensor (F13) ▪ Buffer temperature sensor (F4) ▪ Cylinder temperature sensor, top/bottom (F6/F7) ▪ Flow/return temperature sensor, secondary circuit (F8/F9) ▪ Boiler water temperature sensor, external heat generator (F20) ▪ Air intake/discharge temperature sensor (F2/F3) ▪ Evaporator temperature sensor (F17)	Pt500

Temperature sensors type Ni500

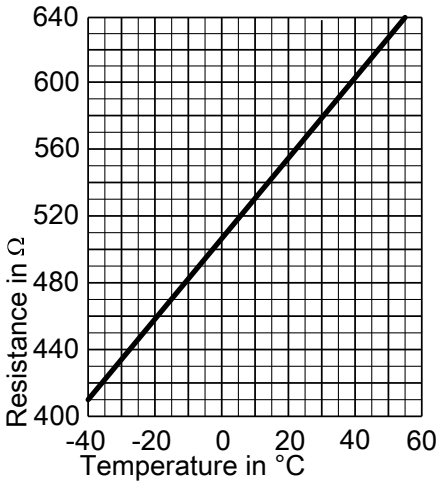

Fig. 71

Temperature sensors type Pt500

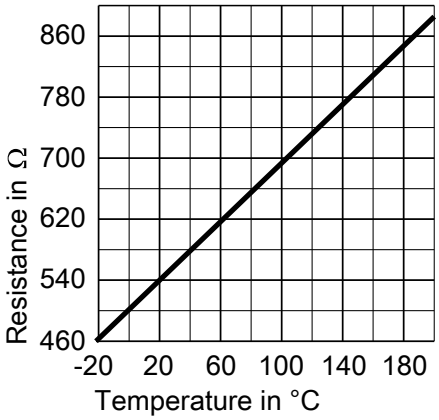

Fig. 72

Check fuses

For fuse locations, see from page 46.
- Fuse F1 is located on the cross connect PCB.
- Fuse F3 is located on the main PCB.

Fuses F1 and F3:
- 6.3 A H (slow), 250 V~
- Max. power loss ≤ 2.5 W

1. Switch OFF the power supply.

2. Opening the wiring chamber.

3. Check fuses. Replace if necessary.

⚠ **Danger**
Incorrect or improperly fitted fuses can lead to an increased risk of fire.
- Insert fuses without using any force. Position fuses correctly.
- Only use structurally identical types with the specified response characteristics.

⚠ **Danger**
Removing the fuse does **not switch the power circuit to zero volt**. Contact with 'live' components can lead to serious injury from electric current.
Before working on the equipment, always ensure that **the power circuit is also at zero volt.**

Repairs (cont.)

Overview of assemblies

The following details are required when ordering parts:
- Serial no. (see type plate Ⓐ)
- Assembly (from this parts list)
- Position number of the individual part within the assembly (from this parts list)

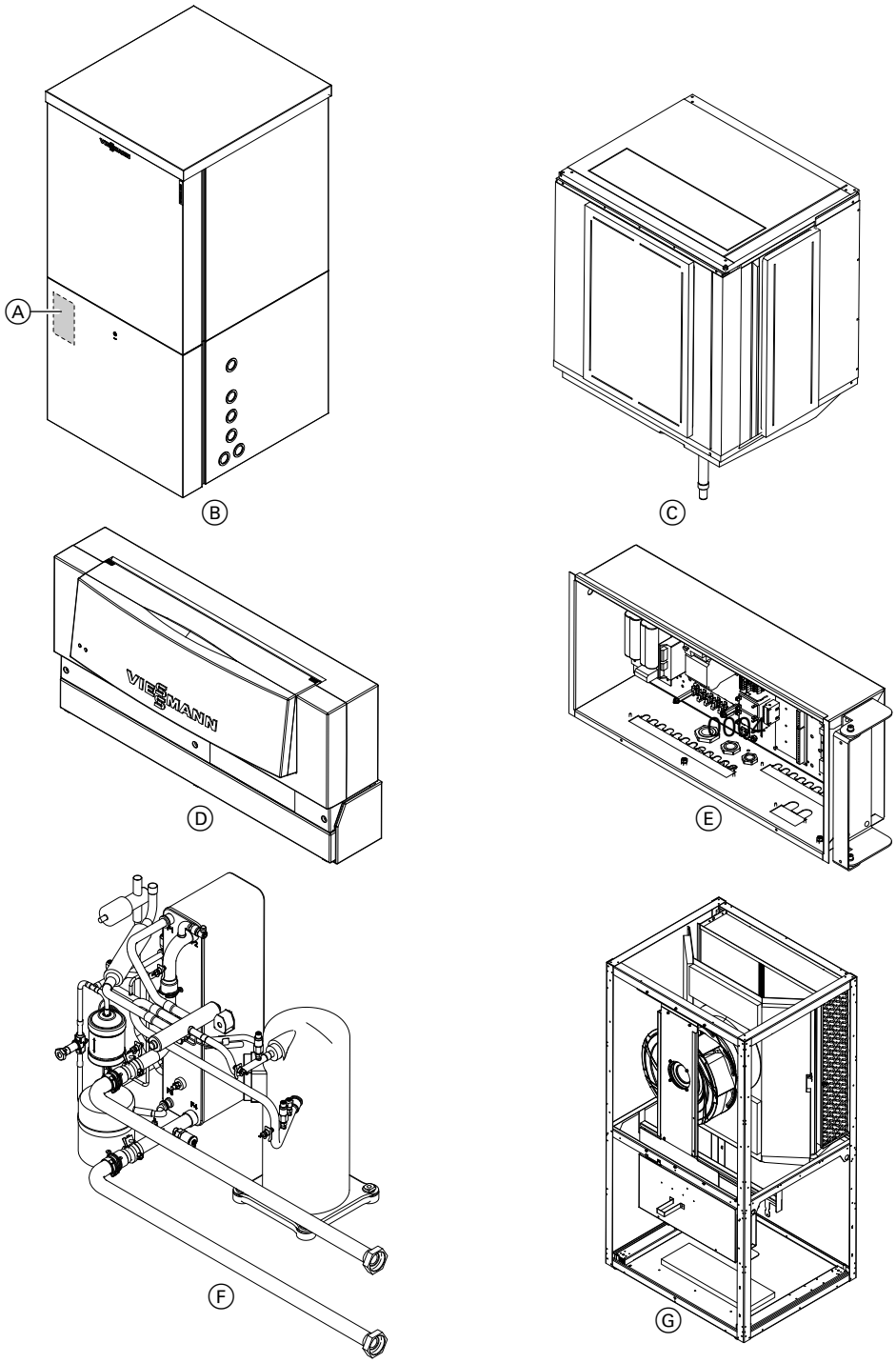

Fig. 73

Ⓐ Type plate
Ⓑ Casing assembly
with sub-assemblies: Front panel, side panel, other
Ⓒ Air module assembly
Ⓓ Heat pump control unit assembly
Ⓔ Electrical equipment assembly
Ⓕ Heat pump module assembly
Ⓖ Base frame assembly

Casing

Front panels

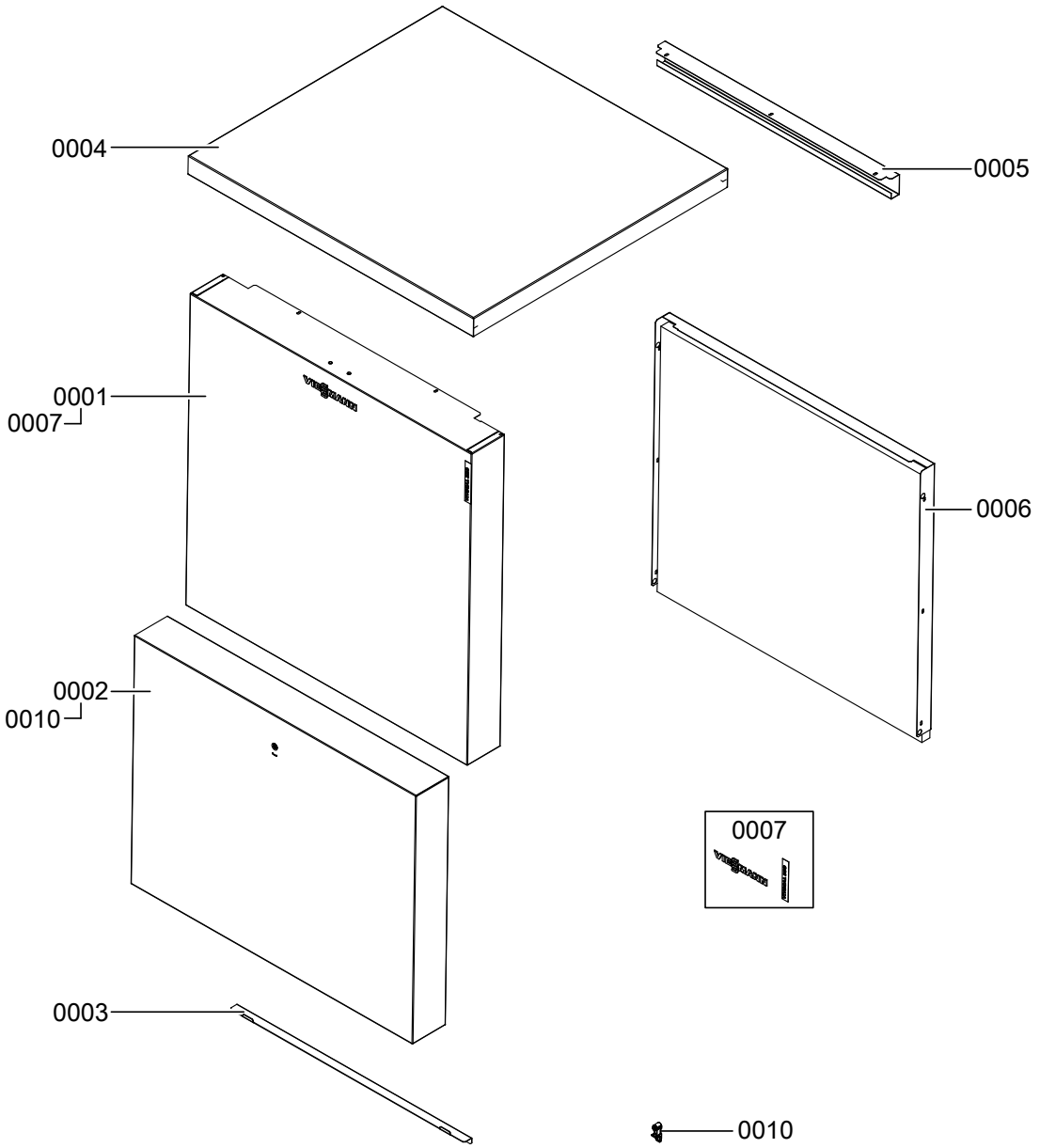

Fig. 74

Casing (cont.)

Pos.	Part
0001	Front panel, top
0002	Front panel, bottom
0003	Angled panel
0004	Top panel
0005	Back panel brace, top
0006	Back panel, bottom
0007	Vitocal 350 logo
0010	Closure

Casing (cont.)

Side panels

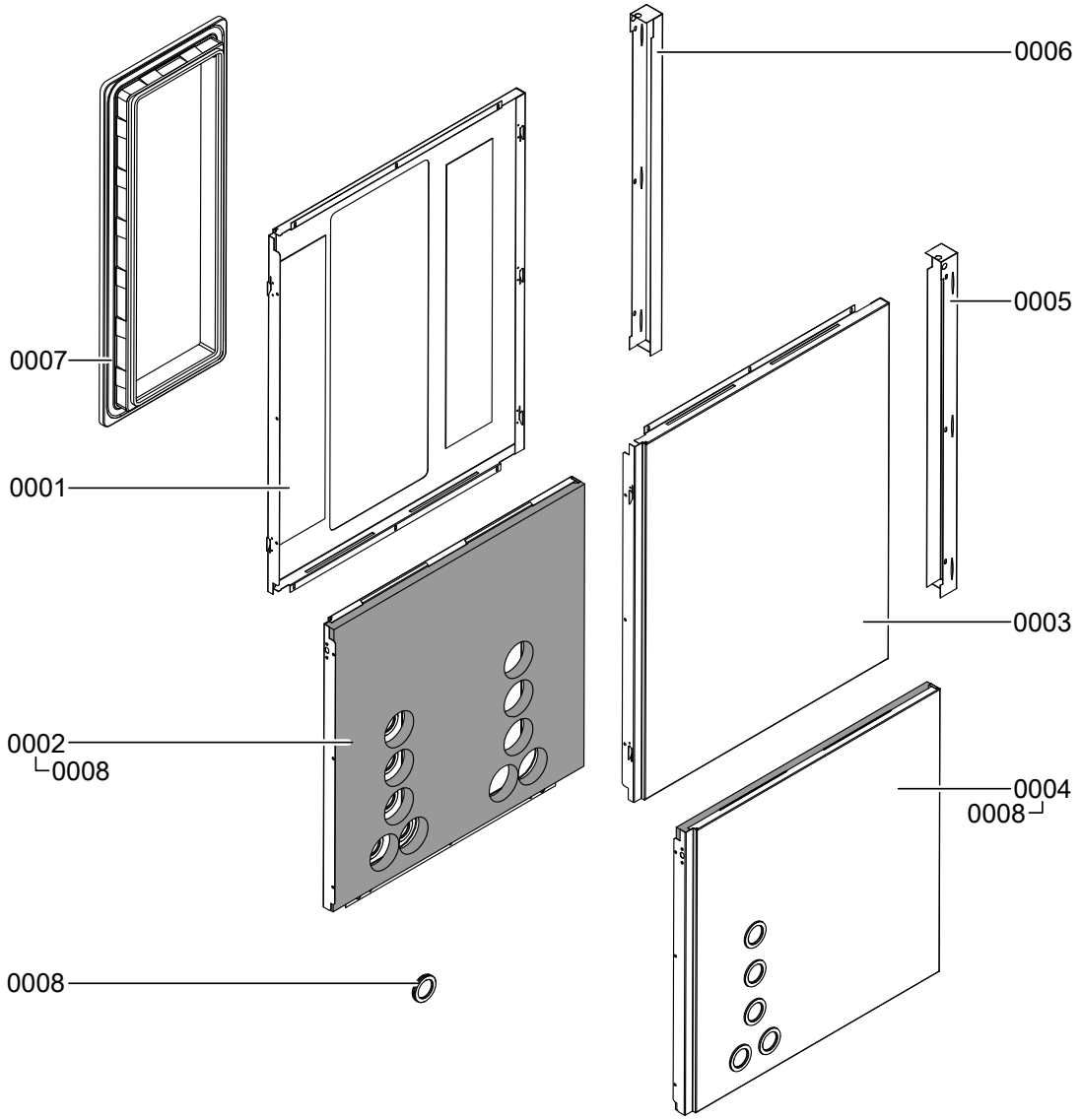

Fig. 75

Casing (cont.)

Pos.	Part
0001	Side panel, top left
0002	Side panel, bottom left
0003	Side panel, top right
0004	Side panel, bottom right
0005	Back panel brace, r.h.
0006	Back panel brace, l.h.
0007	EPP wall outlet adaptor
0008	Diaphragm grommet

Casing (cont.)

Miscellaneous

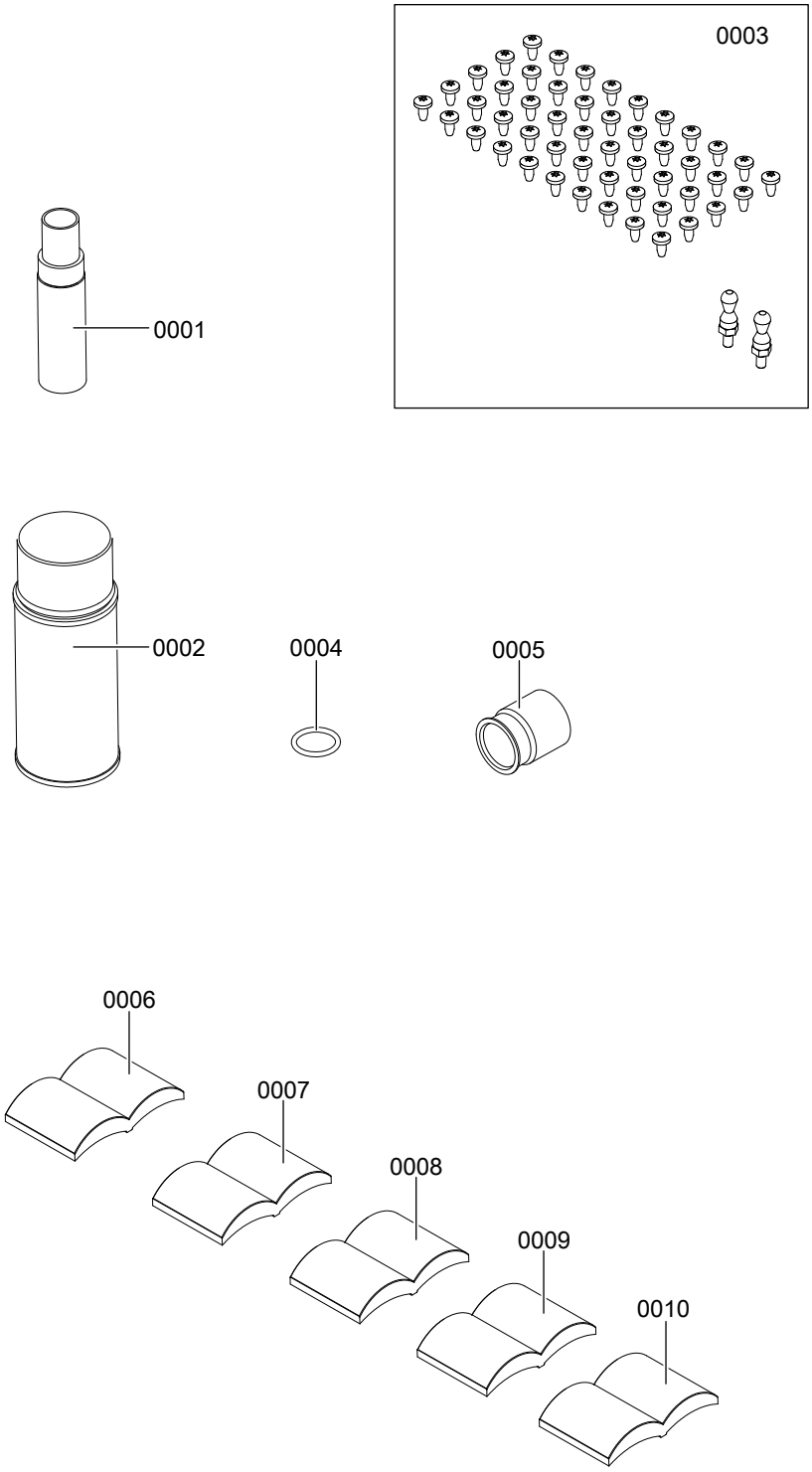

Fig. 76

Casing (cont.)

Pos.	Part
0001	Touch-up paint stick, Vitosilver
0002	Touch-up spray paint, Vitosilver
0003	Connection elements (set)
0004	O-ring ∅ 20.63 x 2.62 mm
0005	Push-fit connector D 28 mm
0006	Installation and service instructions
0007	Operating instructions
0008	Wiring diagram
0009	Power circuit wiring diagram, type AWHI 351.A20
0010	Power circuit wiring diagram, type AWHI 351.A10 and AWHI 351.A14

Air module

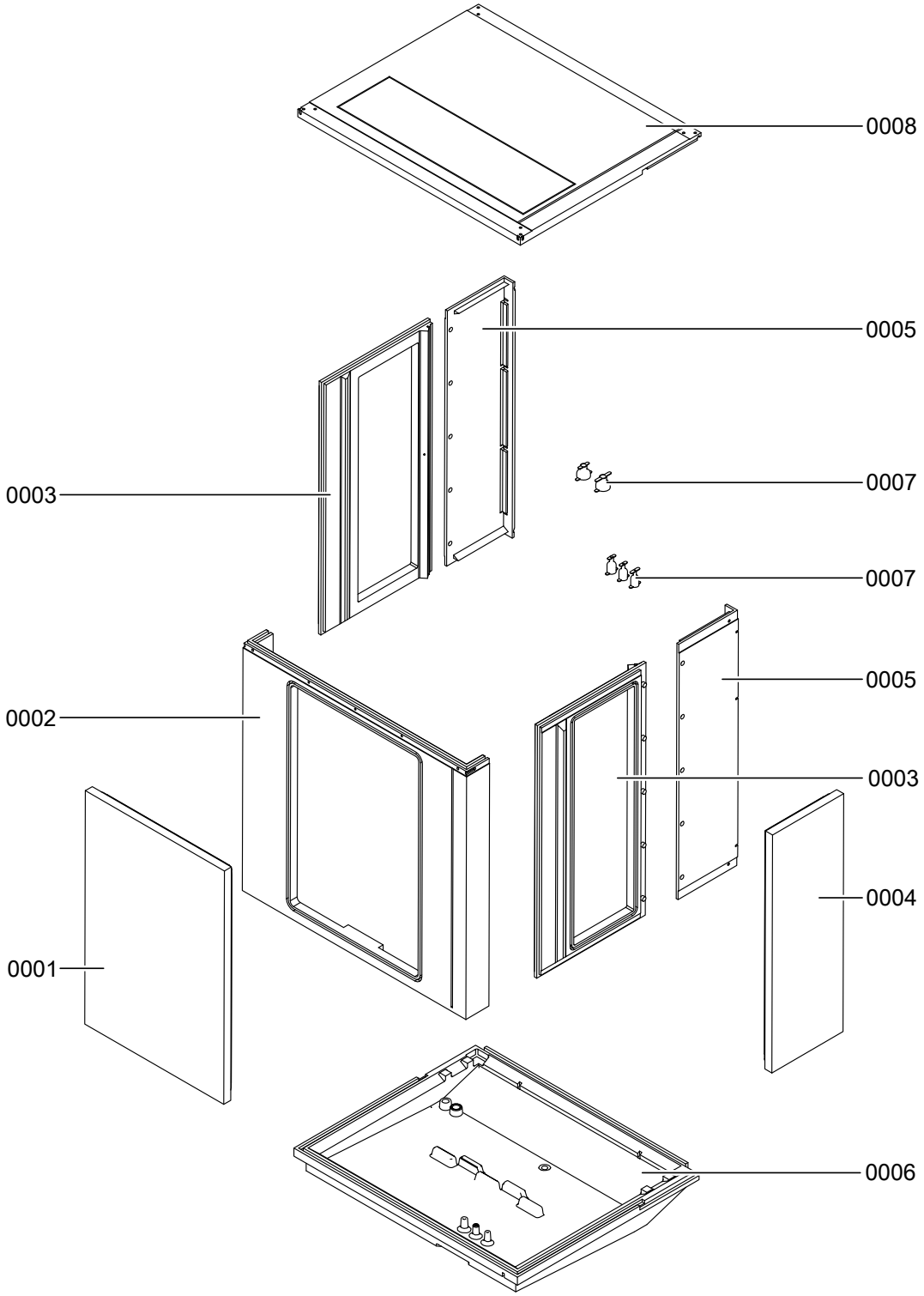

Fig. 77

5692878

Air module (cont.)

Pos.	Part
0001	Lid, front
0002	Front panel
0003	Side panel, front r.h./l.h.
0004	Cover, r.h./l.h.
0005	Side panel, rear r.h./l.h.
0006	Condensate pan
0007	Grommets for condensate pan (set)
0008	Lid, top

Heat pump control unit

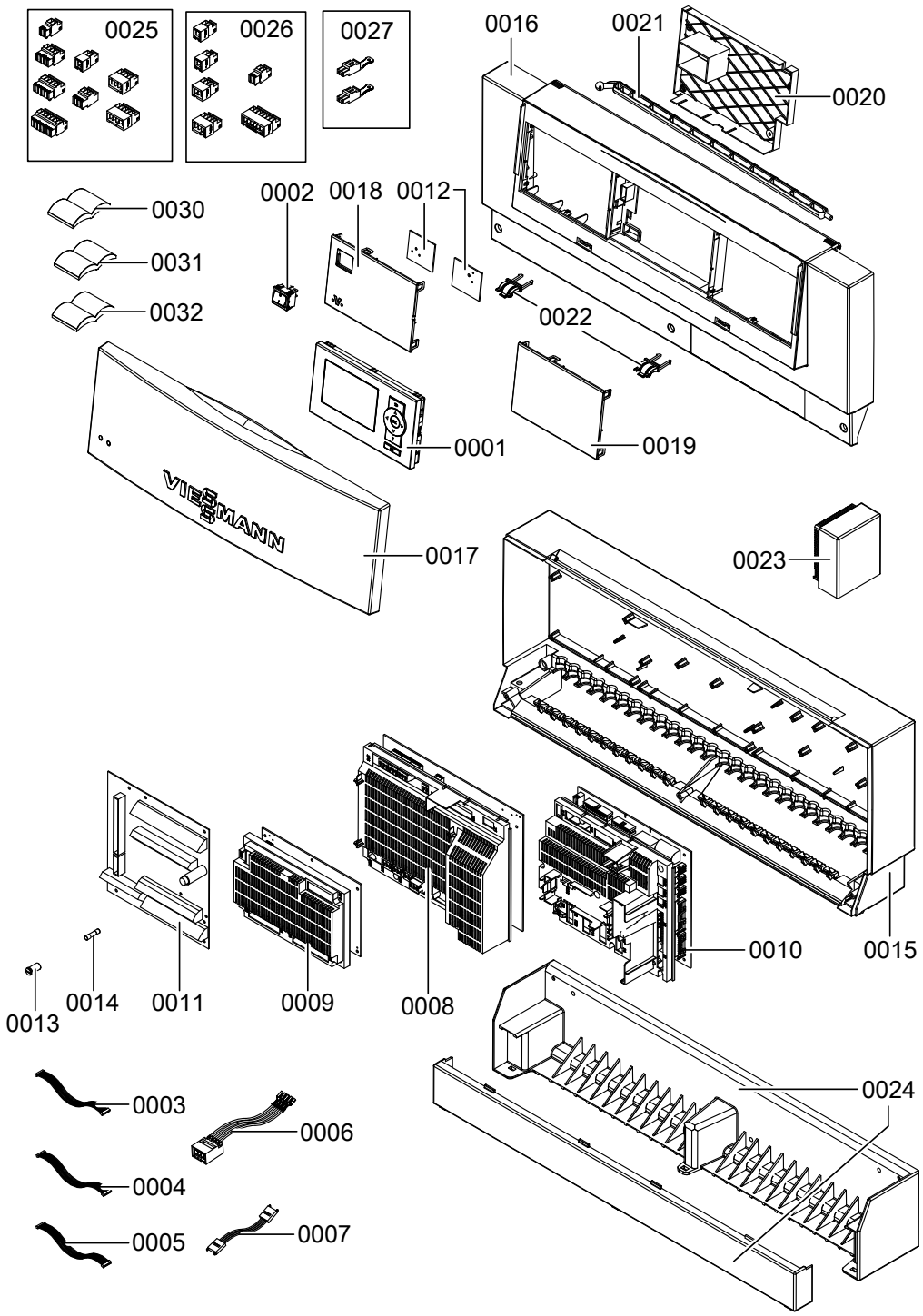

Fig. 78

Heat pump control unit (cont.)

Pos.	Part
0001	Programming unit
0002	ON/OFF switch
0003	Ribbon cable AWG 28 24 x 0.09 folded
0004	Ribbon cable, 16-pole
0005	Ribbon cable, 10-pole
0006	Cable harness ON/OFF switch
0007	4-pole connecting cable, length 85 mm
0008	Main PCB with cover
0009	Expansion PCB with cover
0010	Controller and sensor PCB with cover
0011	Cross connect PCB with cable harness
0012	Optolink and power supply unit PCB
0013	Fuse holder
0014	Fuse, 6.3 A (slow)/250 V (10 pce)
0015	Casing back
0016	Casing front
0017	Front flap
0018	Fascia, left
0019	Fascia, right
0020	LV cover
0021	Supporting stay
0022	Hinges
0023	Outside temperature sensor
0024	Wall mounting bracket
0025	Plug for main PCB (set)
0026	Plug for expansion PCB (set)
0027	Plug for controller and sensor PCB (set)
0030	Operating instructions Vitotronic 200, type WO1B
0031	Service instructions Vitotronic 200, type WO1B
0032	Vitocal installation and service instructions

Electrical equipment

Type AWHI 351.A10 and AWHI 351.A14

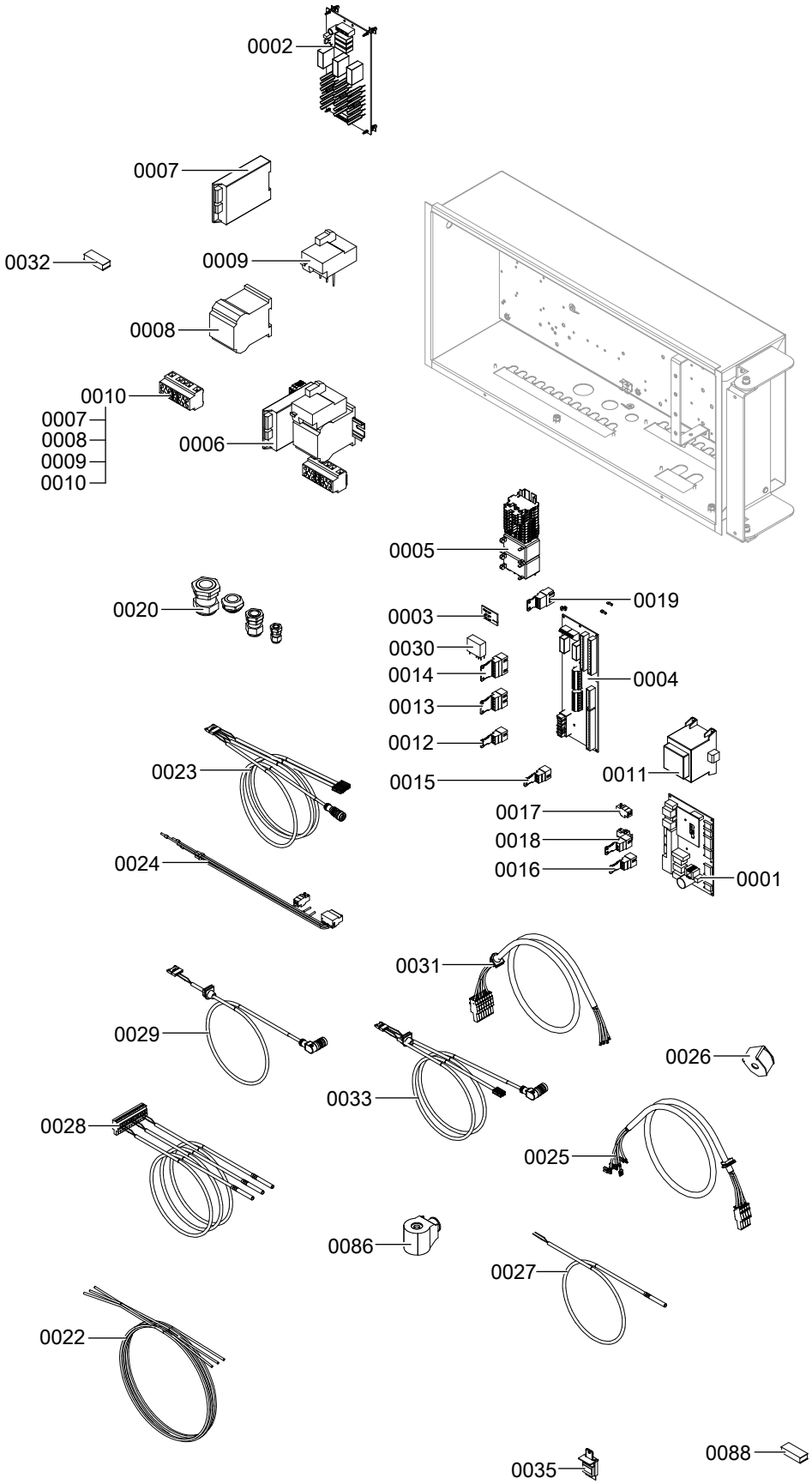

Fig. 79

Electrical equipment (cont.)

Pos.	Part
0001	EEV PCB
0002	Full wave soft starter
0003	Speed plug
0004	Distributor PCB
0005	Switching module for instantaneous heating water heater
0006	Switching module
0007	Three-phase monitor
0008	3-pole contactor
0009	Thermal relay
0010	3-pole mains terminal
0011	Transformer EEV
0012	Plug 25
0013	Plug 26
0014	Plug 116
0015	Plug 57
0016	Plug 39
0018	Plug (EEV enable)
0019	Plug 97
0020	Control panel cable fittings
0022	Switching module cable set
0023	Cable harness, high pressure
0024	Cable harness, EEV module
0025	Compressor connecting cable, 230 V~
0026	Coil, 4-way diverter valve
0027	Temperature sensor Pt500
0028	Low voltage cable harness
0029	Electronic expansion valve connecting cable
0030	Coupling relay
0031	Cable set, instantaneous heating water heater
0032	Auxiliary contact
0034	Cable harness, low pressure
0035	Coding card
0086	Solenoid valve
0088	2-pole connection terminal

Electrical equipment (cont.)

Type AWHI 351.A20

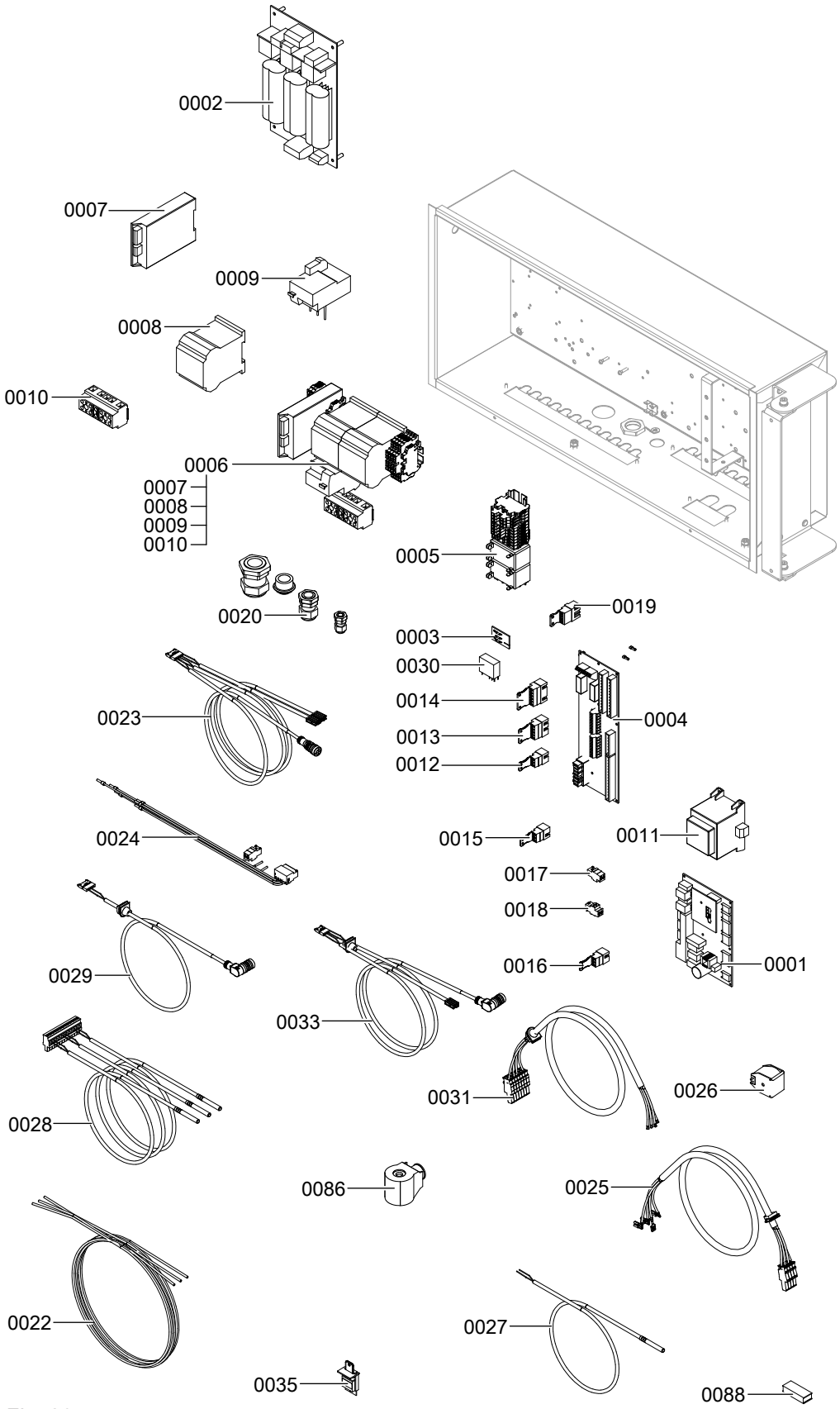

Fig. 80

Components

5692878

Electrical equipment (cont.)

Pos.	Part
0001	EEV PCB
0002	Full wave soft starter
0003	Speed plug
0004	Distributor PCB
0005	Switching module for instantaneous heating water heater
0006	Switching module
0007	Three-phase monitor
0008	3-pole contactor
0009	Thermal relay
0010	3-pole mains terminal
0011	Transformer EEV
0012	Plug 25
0013	Plug 26
0014	Plug 116
0015	Plug 57
0016	Plug 39
0018	Plug (EEV enable)
0019	Plug 97
0020	Control panel cable fittings
0022	Switching module cable set
0023	Cable harness, high pressure
0024	Cable harness, EEV module
0025	Compressor connecting cable, 230 V~
0026	Coil, 4-way diverter valve
0027	Temperature sensor Pt500
0028	Low voltage cable harness
0029	Electronic expansion valve connecting cable
0030	Coupling relay
0031	Cable set, instantaneous heating water heater
0034	Cable harness, low pressure
0035	Coding card
0086	Solenoid valve
0088	2-pole connection terminal

Heat pump module

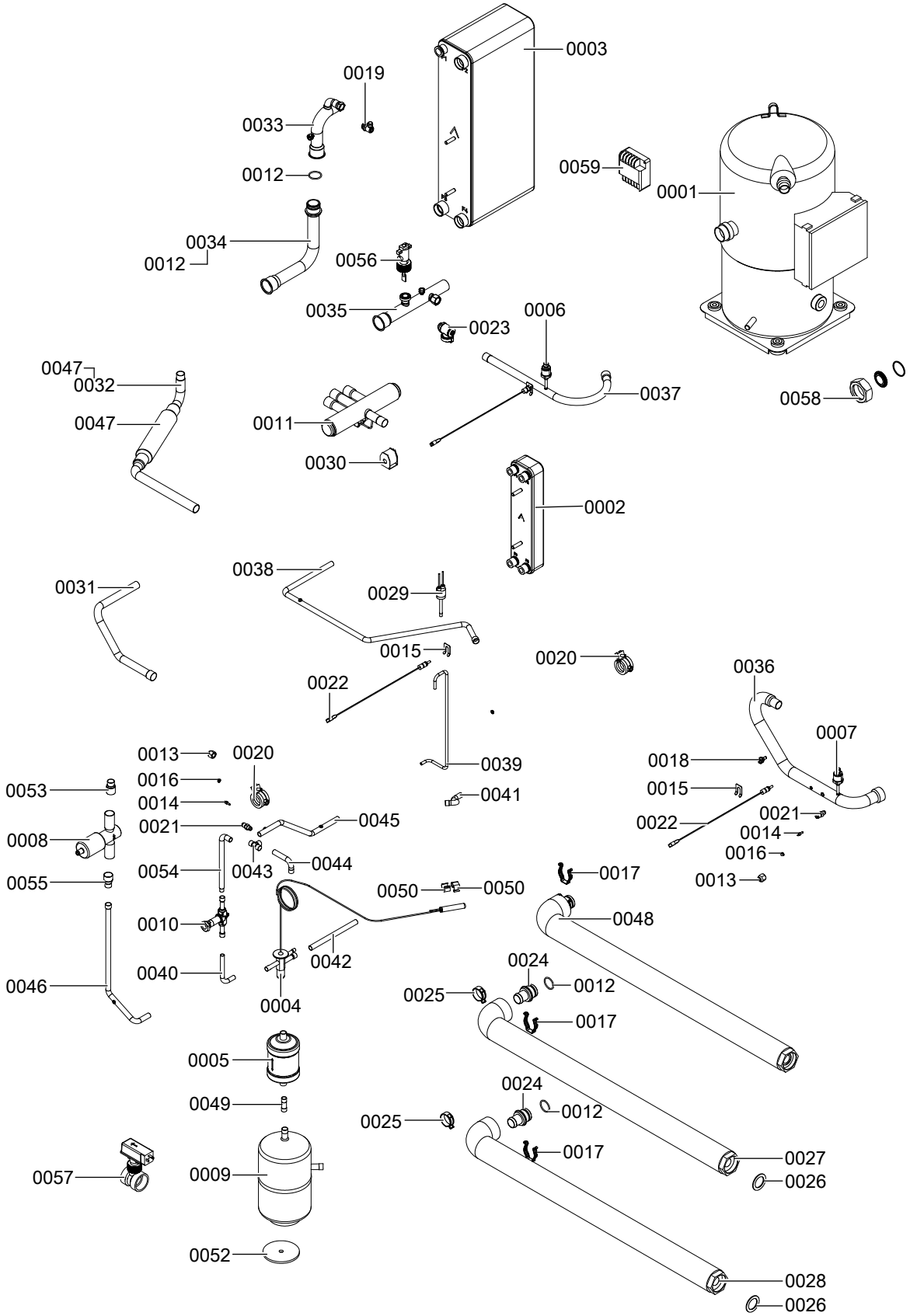

Fig. 81

Heat pump module (cont.)

Pos.	Part
0001	Compressor
0002	Heat exchanger
0003	Condenser
0004	Thermostatic expansion valve
0005	Filter dryer
0006	High pressure sensor
0007	Low pressure sensor
0008	Electronic expansion valve
0009	Refrigerant receiver
0010	Solenoid valve
0011	4-way diverter valve
0012	O-ring ∅ 28.0 x 2.5 mm
0013	Union nut G ¼ with sealing cap
0014	Schrader valve
0015	Spring clip
0016	Sealing cap B 6
0017	Spring clip ∅ 28 mm
0018	Sensor well sealed
0019	Air vent valve G ⅜
0020	Pipe clip ∅ 26 to 28 mm, M 8, EPDM insert
0021	Valve body 7/16
0022	Temperature sensor Pt500
0023	Drain & fill valve G ⅜
0024	Connector D 28 internal 84 mm
0025	Spring clip DN 32 standard
0026	Gasket A 30 x 44 x 2 mm
0027	Hose 1½ with bend
0028	Connection set
0029	CB pressure switch 31.2 bar (3.12 MPa)
0030	Coil, 4-way diverter valve
0031	Refrigerant line, 4-way diverter valve — condenser
0032	Refrigerant line, compressor
0033	Condenser flow
0034	Flow
0035	Condenser return
0036	Refrigerant line, suction line — compressor
0037	Refrigerant line, hot gas line — compressor
0038	Refrigerant line, evaporator — compressor
0039	Refrigerant line, pressure compensation
0040	Refrigerant line, solenoid valve
0041	Refrigerant line, condenser — refrigerant receiver
0042	Refrigerant line
0043	Tee
0044	Refrigerant line, filter dryer — tee
0045	Refrigerant line, refrigerant receiver — evaporator

Heat pump module (cont.)

Pos.	Part
0046	Refrigerant line, evaporator
0047	DN 18/DN 25 expansion joint
0048	Spiral hose thermal insulation
0049	Refrigerant line, refrigerant receiver — filter dryer
0050	Tension clip
0052	Gasket 8 x 12 mm, 50 x 5 mm
0053	Connector 22 x 16 mm
0054	Refrigerant line, intermediate injection
0055	Connector 22 x 15 mm
0056	Flow switch
0057	Flow switch VKS32, external
0058	Compressor sight glass

Heat pump module (cont.)

Base frame

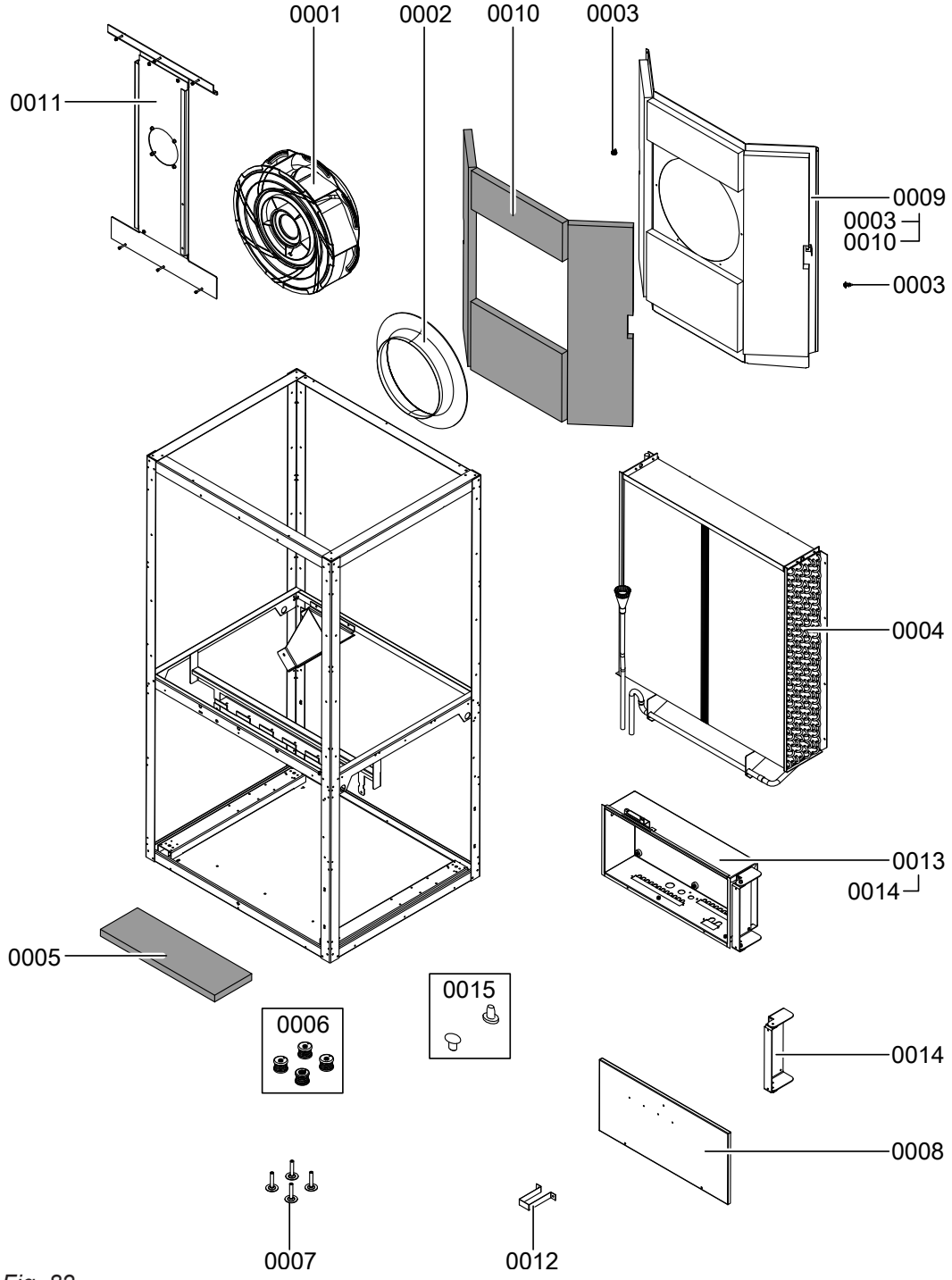

Fig. 82

Base frame (cont.)

Pos.	Part
0001	Radial fan
0002	Inlet ring for radial fan
0003	EPP connecting screw
0004	Evaporator
0005	Sound insulation mat base plate
0006	Anti-vibration mounts (set)
0007	Adjustable foot D 46, M12 x 70 (set)
0008	Cover, control panel
0009	Inlet mounting plate (set)
0010	Sound insulation mats (set)
0011	Fan mounting plate (set)
0012	Mounting brackets (set)
0013	Control panel (set)
0014	Hinge
0015	Fixing kit

Base frame (cont.)

Overview of assemblies

The following details are required when ordering parts:
- Serial no. (see type plate Ⓐ)
- Assembly (from this parts list)
- Position number of the individual part within the assembly (from this parts list)

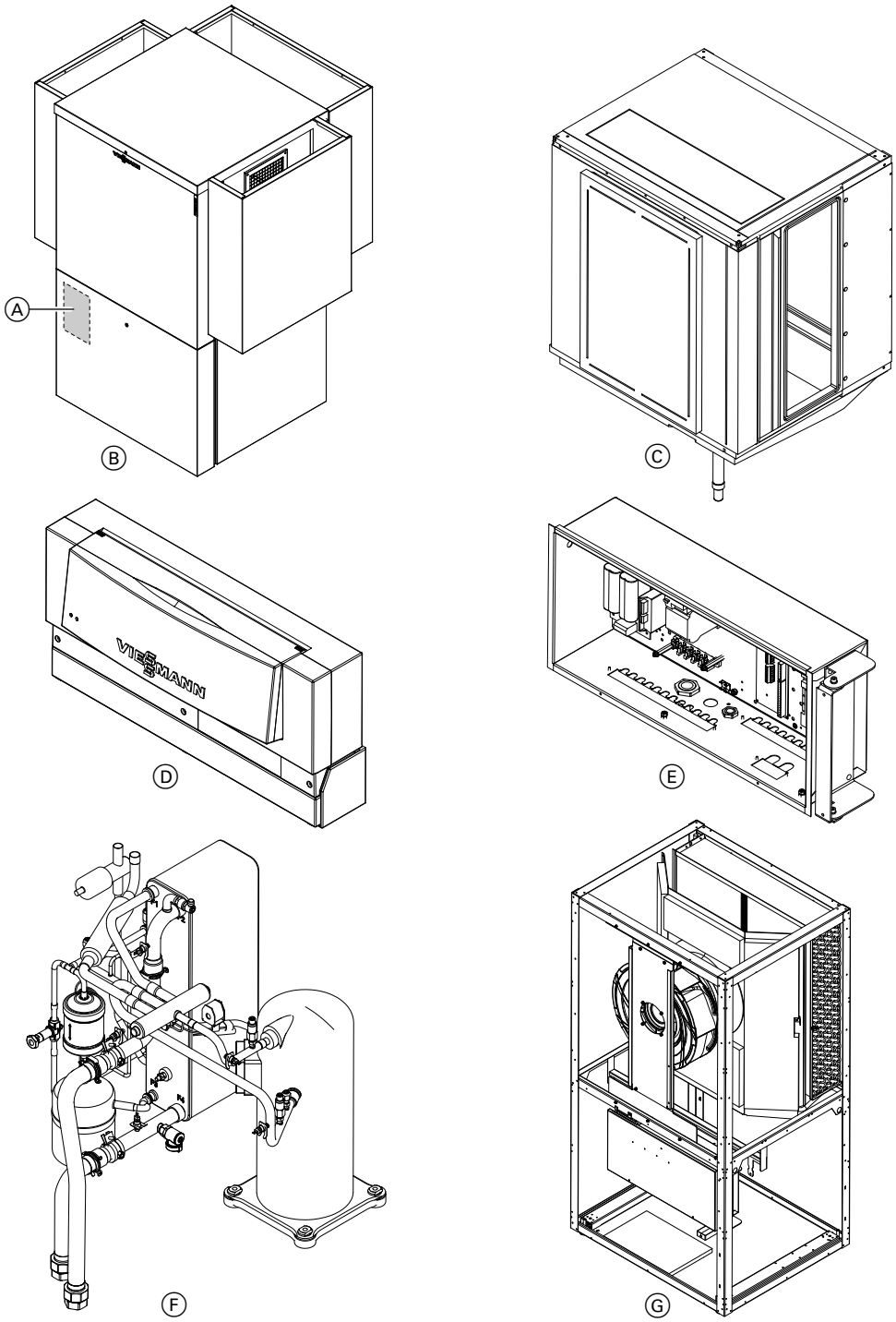

Fig. 83

Ⓐ Type plate
Ⓑ Casing assembly
with sub-assemblies: Front panel, side panel, silencer hood, other
Ⓒ Air module assembly
Ⓓ Heat pump control unit assembly
Ⓔ Electrical equipment assembly
Ⓕ Heat pump module assembly
Ⓖ Base frame assembly

Casing

Front panels

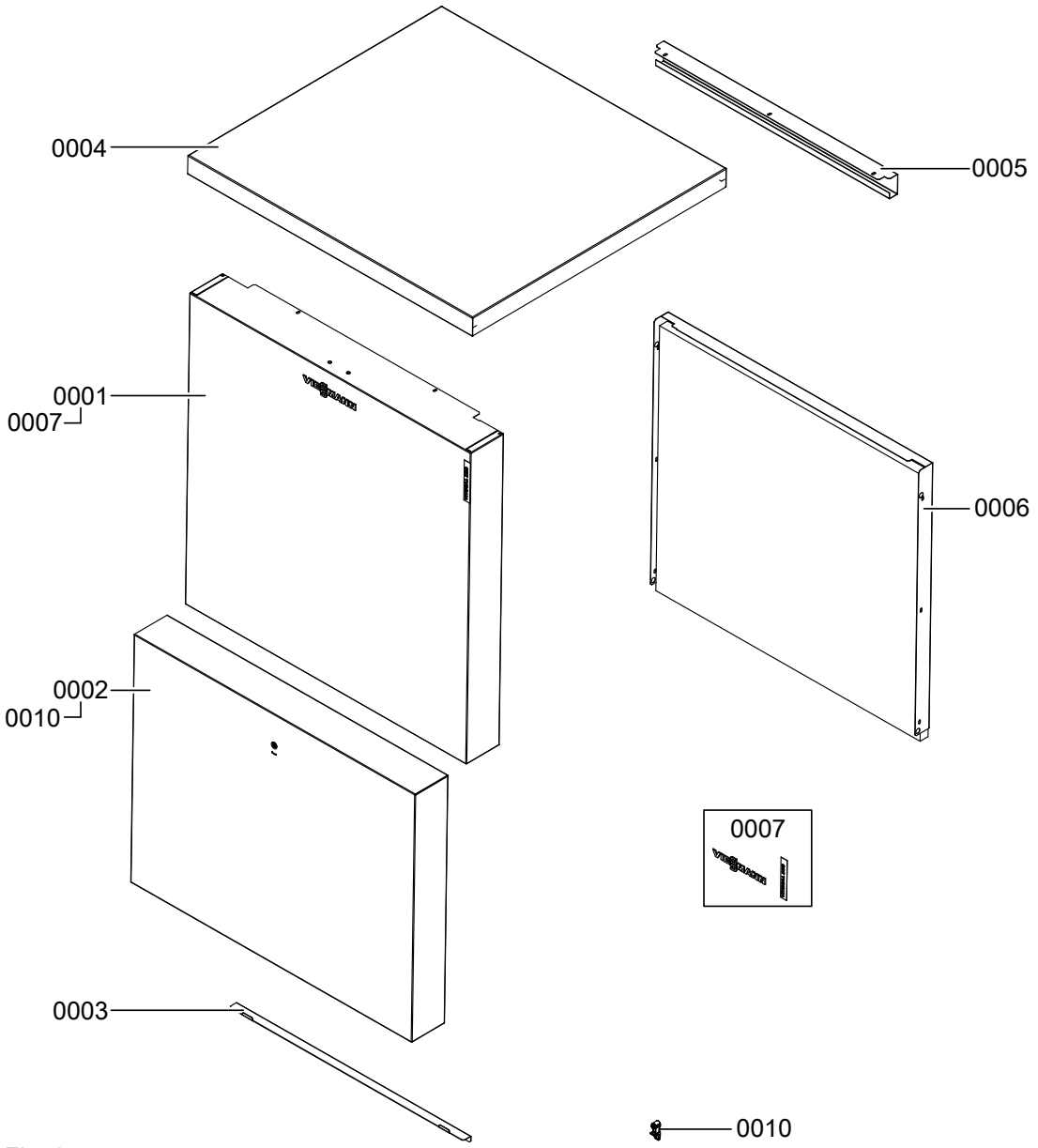

Fig. 84

Casing (cont.)

Pos.	Part
0001	Front panel, top
0002	Front panel, bottom
0003	Angled panel
0004	Top panel
0005	Back panel brace, top
0006	Back panel, bottom
0007	Vitocal 350 logo
0010	Closure

Casing (cont.)

Side panels

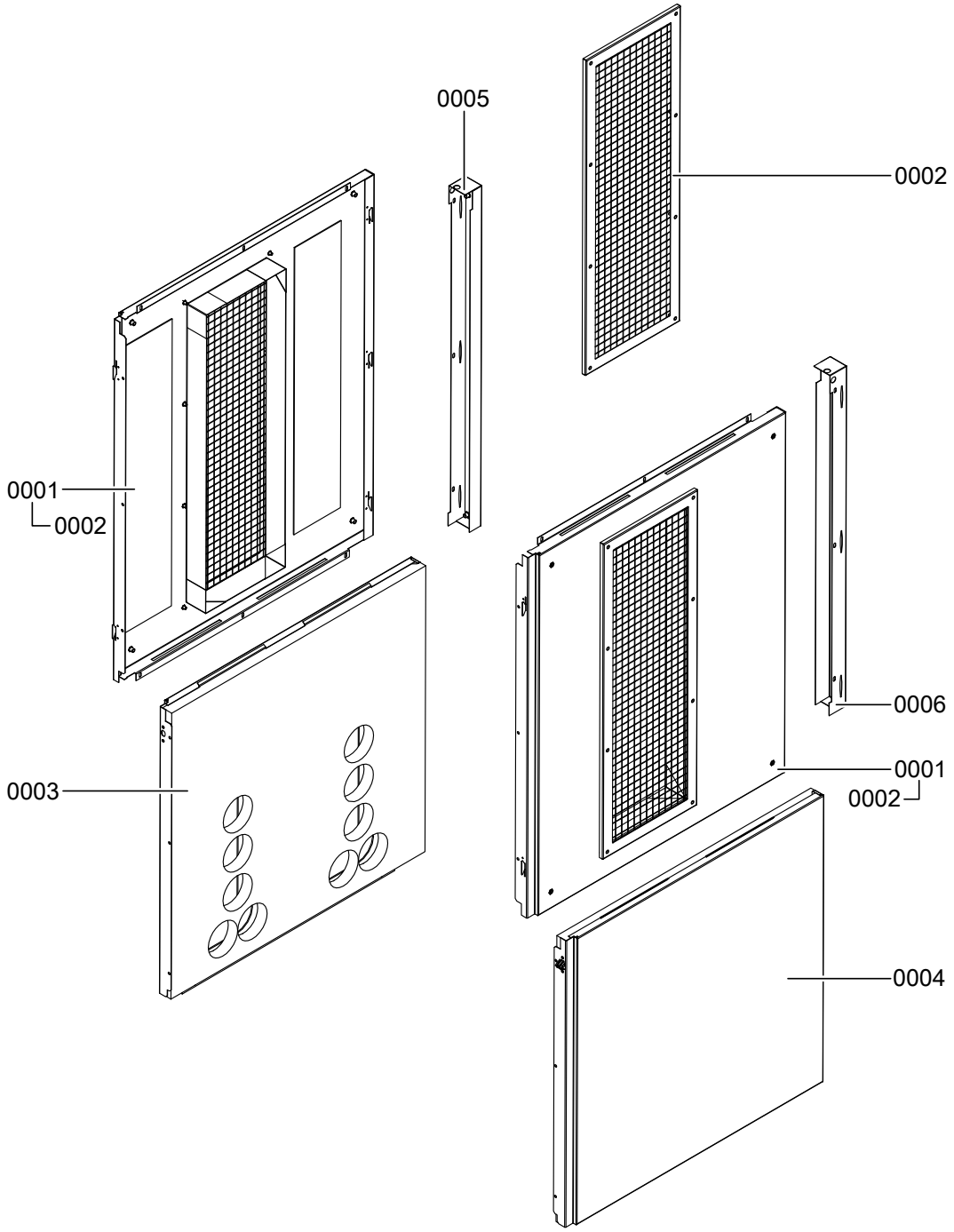

Fig. 85

Casing (cont.)

Pos.	Part
0001	Side panel, top, with cover grille
0002	Grille cover for side panel
0003	Side panel, bottom left
0004	Side panel, bottom right
0005	Back panel brace, l.h.
0006	Back panel brace, r.h.

Casing (cont.)

Silencer hood

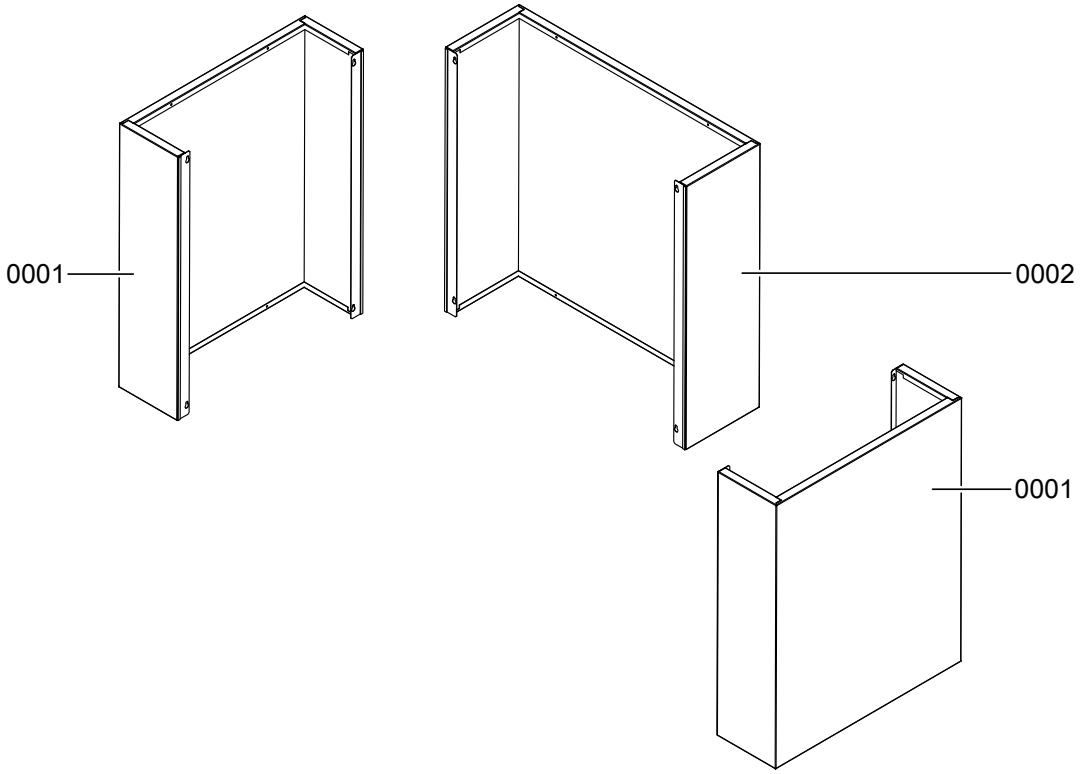

Fig. 86

Casing (cont.)

Pos.	Part
0001	Left/right silencer hood
0002	Rear silencer hood

Casing (cont.)

Miscellaneous

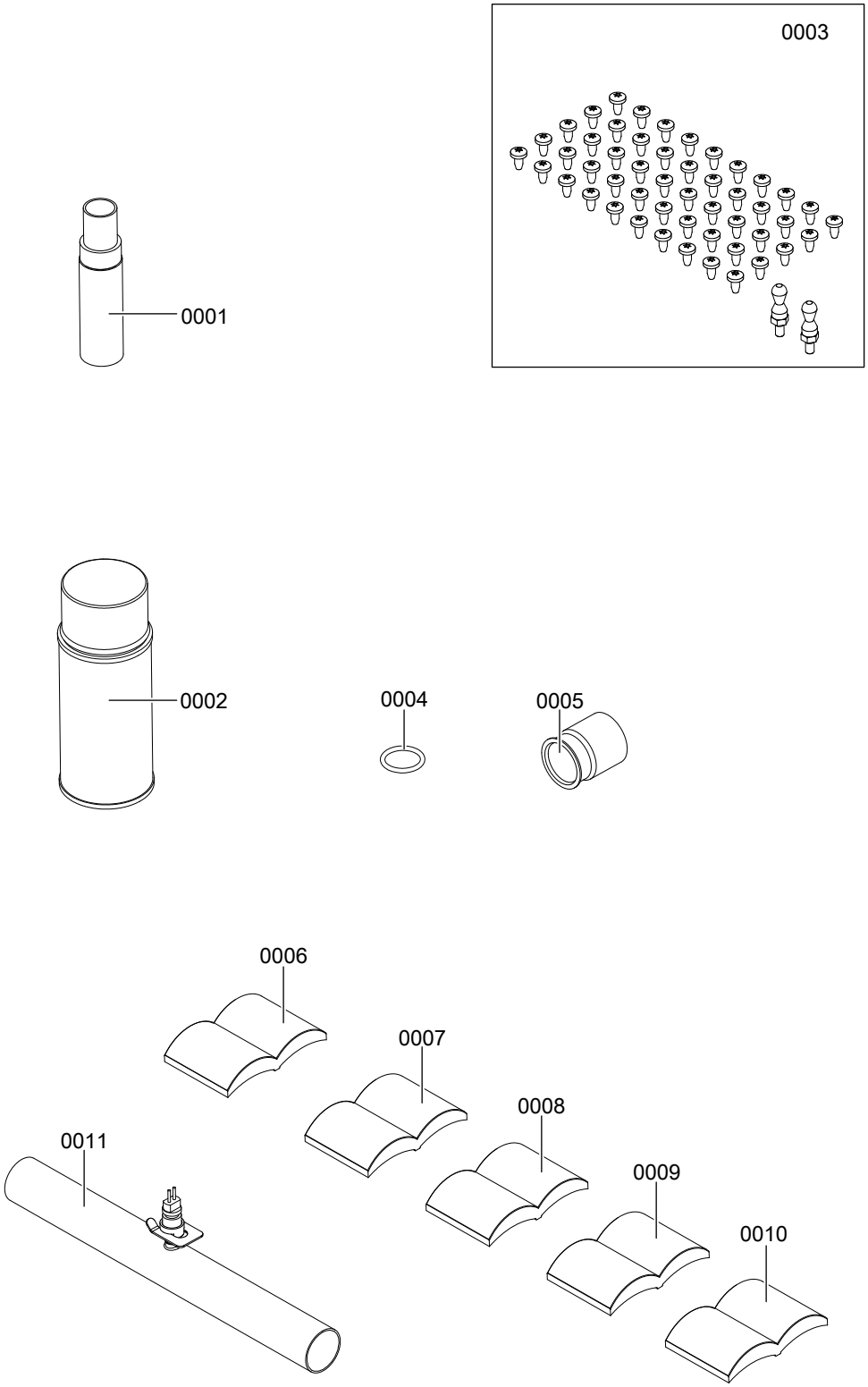

Fig. 87

Casing (cont.)

Pos.	Part
0001	Touch-up paint stick, Vitosilver
0002	Touch-up spray paint, Vitosilver
0003	Connection elements (set)
0004	O-ring ∅ 20.63 x 2.62 mm
0005	Push-fit connector D 8 mm
0006	Installation and service instructions
0007	Operating instructions
0008	Wiring diagram
0009	Power circuit wiring diagram, type AWHO 351.A20
0010	Power circuit wiring diagram, type AWHO 351.A10 and AWHO 351.A14
0011	Temperature sensor (set)

Air module

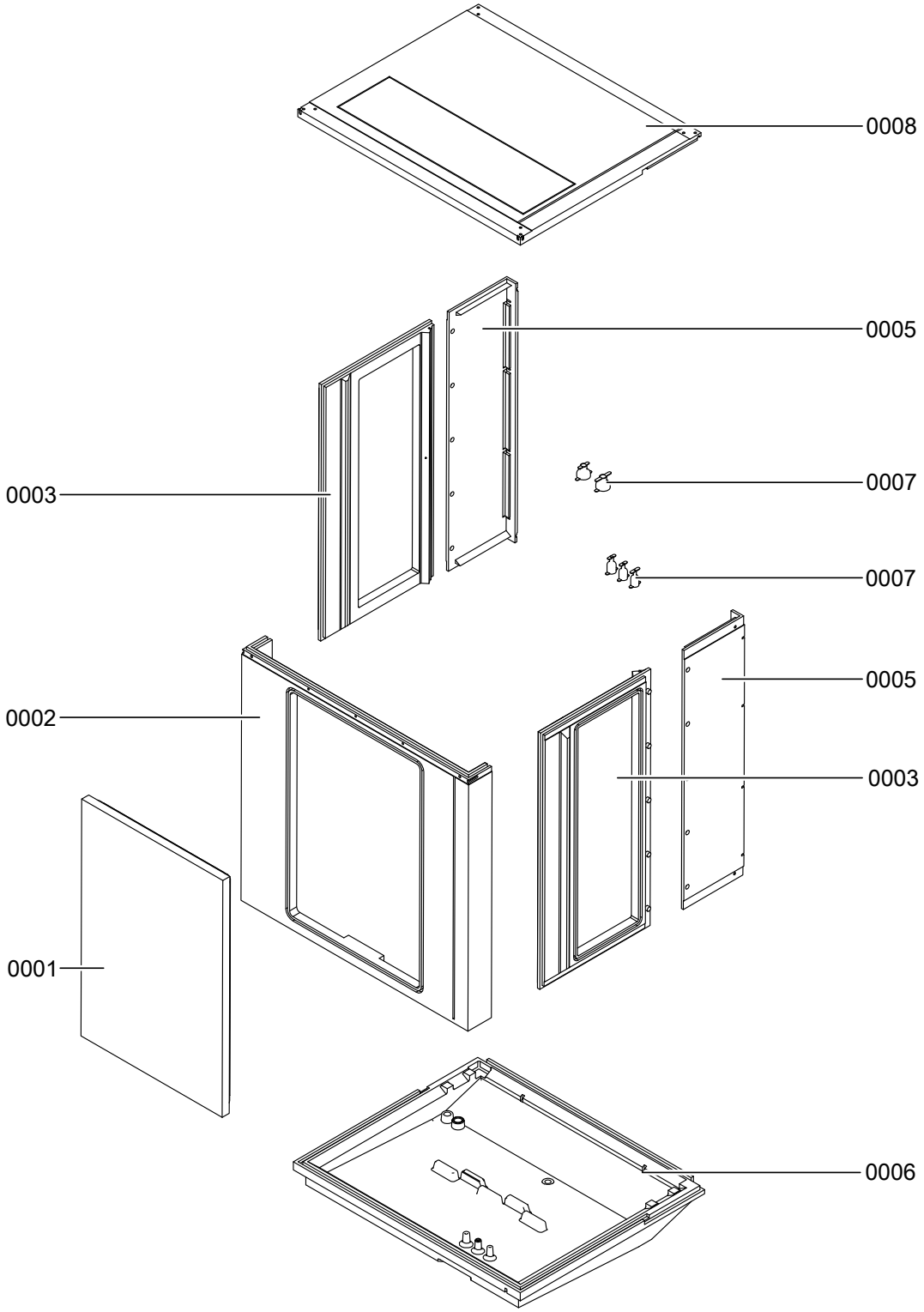

Fig. 88

Air module (cont.)

Pos.	Part
0001	Lid, front
0002	Front panel
0003	Side panel, front l.h./r.h.
0005	Side panel, rear l.h./r.h.
0006	Condensate pan
0007	Grommets for condensate pan (set)
0008	Lid, top

Heat pump control unit

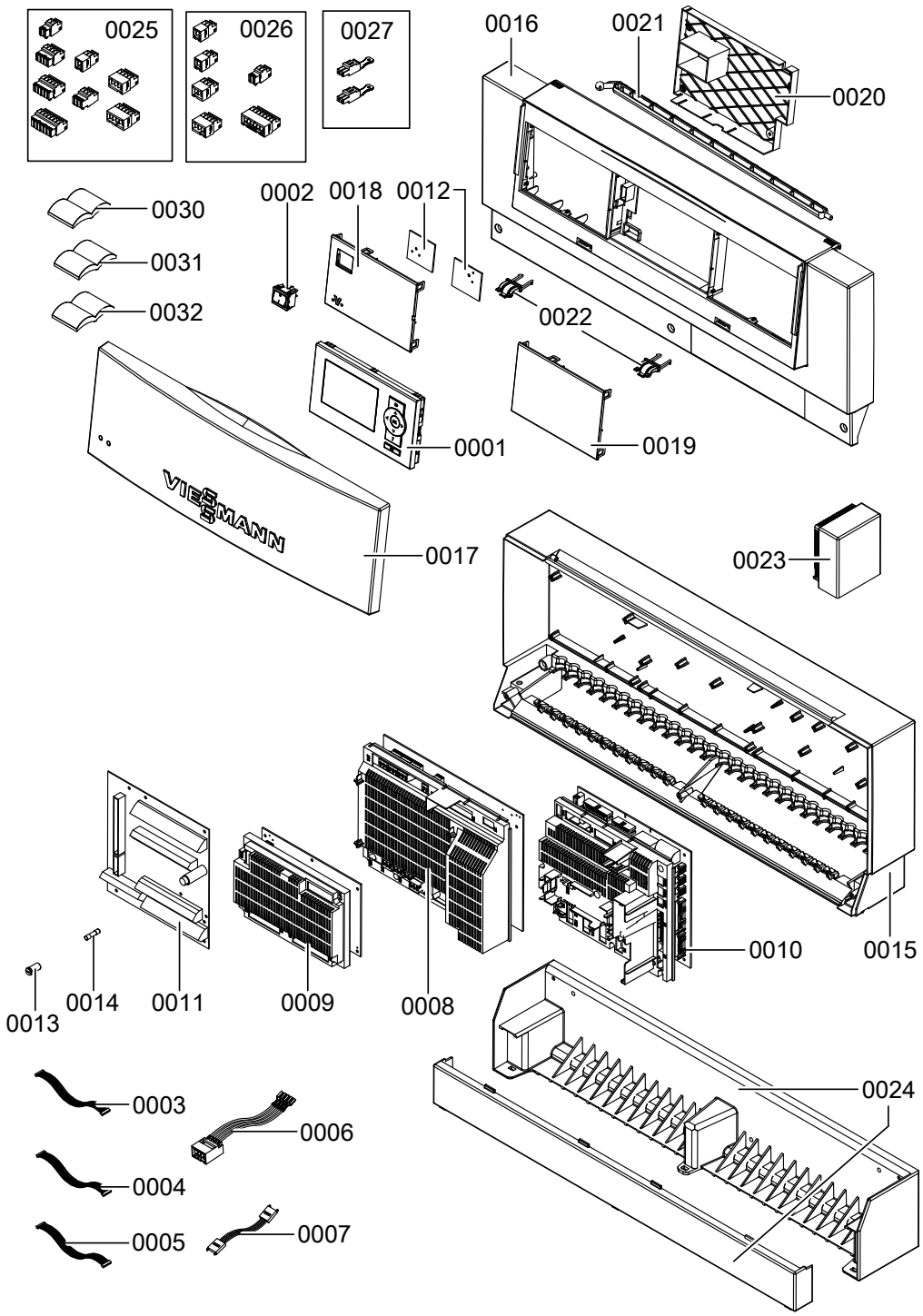

Fig. 89

Heat pump control unit (cont.)

Pos.	Part
0001	Programming unit
0002	ON/OFF switch
0003	Ribbon cable AWG 28 24 x 0.09 folded
0004	Ribbon cable, 16-pole
0005	Ribbon cable, 10-pole
0006	Cable harness ON/OFF switch
0007	4-pole connecting cable, length 85 mm
0008	Main PCB with cover
0009	Expansion PCB with cover
0010	Controller and sensor PCB with cover
0011	Cross connect PCB with cable harness
0012	Optolink and power supply unit PCB
0013	Fuse holder
0014	Fuse 6.3 A (slow)/250 V (10 pce)
0015	Casing back
0016	Casing front
0017	Front flap
0018	Fascia, left
0019	Fascia, right
0020	LV cover
0021	Supporting stay
0022	Hinges
0023	Outside temperature sensor
0024	Wall mounting bracket
0025	Plug for main PCB (set)
0026	Plug for expansion PCB (set)
0027	Plug for controller and sensor PCB (set)
0030	Operating instructions Vitotronic 200, type WO1B
0031	Service instructions Vitotronic 200, type WO1B
0032	Vitocal installation and service instructions

Electrical equipment

Type AWHO 351.A10 and AWHO 351.A14

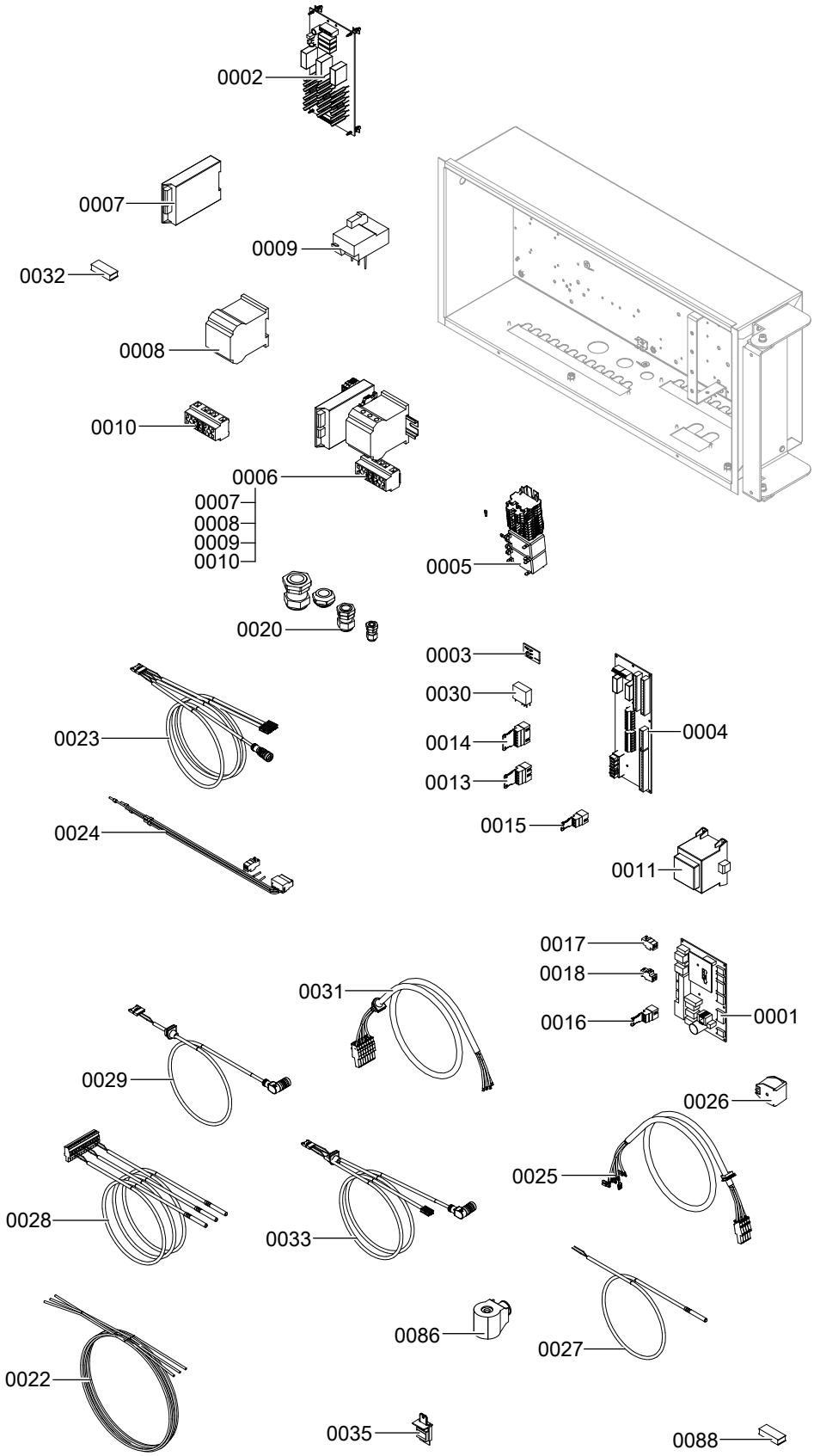

Fig. 90

Electrical equipment (cont.)

Pos.	Part
0001	EEV PCB
0002	Full wave soft starter
0003	Speed plug
0004	Distributor PCB
0005	Switching module for instantaneous heating water heater
0006	Switching module
0007	Three-phase monitor
0008	3-pole contactor
0009	Thermal relay
0010	3-pole mains terminal
0011	Transformer EEV
0013	Plug 26
0014	Plug 116
0015	Plug 57
0016	Plug 39
0018	Plug (EEV enable)
0020	Control panel cable fittings
0022	Switching module cable set
0023	Cable harness, high pressure
0024	Cable harness, EEV module
0025	Compressor connecting cable, 230 V~
0026	Coil, 4-way diverter valve
0027	Temperature sensor Pt500
0028	Low voltage cable harness
0029	Electronic expansion valve connecting cable
0030	Coupling relay
0031	Cable set, instantaneous heating water heater
0032	Auxiliary contact
0034	Cable harness, low pressure
0035	Coding card
0086	Solenoid valve
0088	2-pole connection terminal

Electrical equipment (cont.)

Type AWHO 351.A20

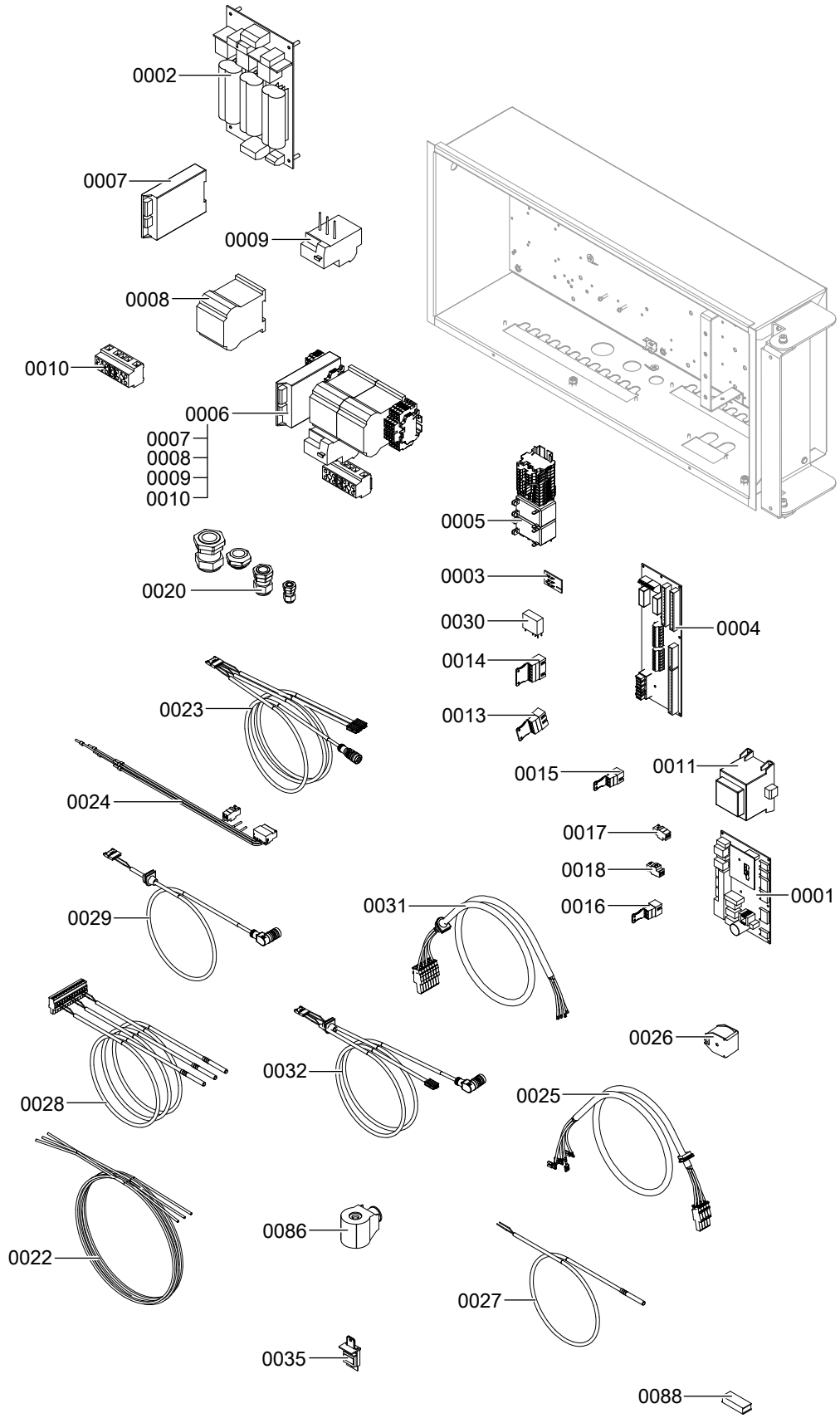

Fig. 91

5692878

Electrical equipment (cont.)

Pos.	Part
0001	EEV PCB
0002	Full wave soft starter
0003	Speed plug
0004	Distributor PCB
0005	Switching module for instantaneous heating water heater
0006	Switching module
0007	Three-phase monitor
0008	3-pole contactor
0009	Thermal relay
0010	3-pole mains terminal
0011	Transformer EEV
0013	Plug 26
0014	Plug 116
0015	Plug 57
0016	Plug 39
0018	Plug (EEV enable)
0020	Control panel cable fittings
0022	Switching module cable set
0023	Cable harness, high pressure
0024	Cable harness, EEV module
0025	Compressor connecting cable, 230 V~
0026	Coil, 4-way diverter valve
0027	Temperature sensor Pt500
0028	Low voltage cable harness
0029	Electronic expansion valve connecting cable
0030	Coupling relay
0031	Cable set, instantaneous heating water heater
0034	Cable harness, low pressure
0035	Coding card
0086	Solenoid valve
0088	2-pole connection terminal

Heat pump module

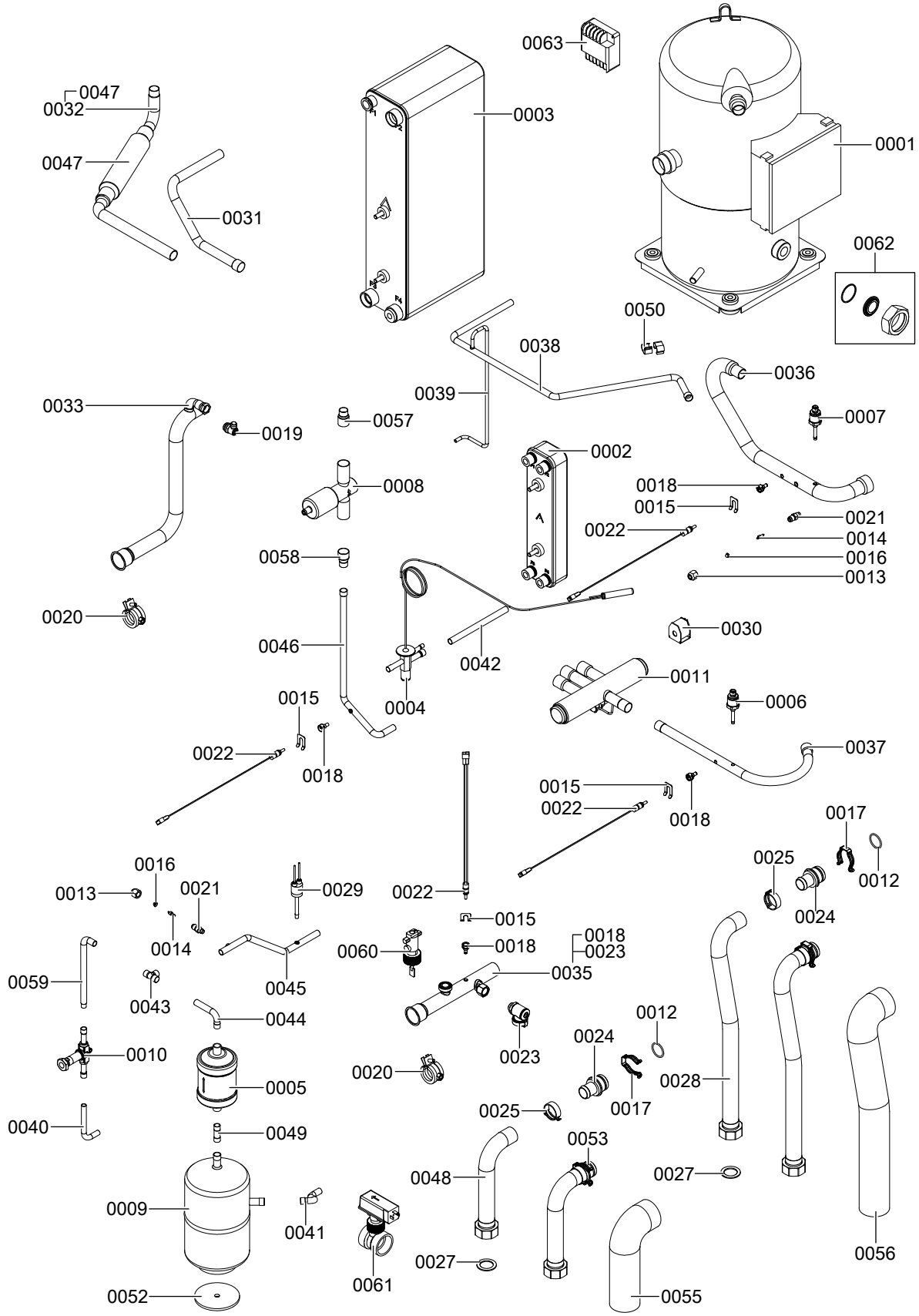

Fig. 92

Heat pump module (cont.)

Pos.	Part
0001	Compressor
0002	Heat exchanger
0003	Condenser
0004	Thermostatic expansion valve
0005	Filter dryer BFK-163S
0006	High pressure sensor
0007	Low pressure sensor
0008	Electronic expansion valve
0009	Refrigerant receiver
0010	Solenoid valve
0011	4-way diverter valve
0012	O-ring ∅ 28.0 x 2.5 mm
0013	Union nut G ¼ with sealing cap
0014	Schrader valve
0015	Spring clip
0016	Sealing cap B 6
0017	Spring clip D 28
0018	Sensor well sealed
0019	Air vent valve G ⅜
0020	Pipe clip ∅ 26-28 mm, M 8, EPDM insert
0021	Valve body 7/16
0022	Temperature sensor Pt500
0023	Drain & fill valve G ⅜
0024	Connector D 28 internal 84 mm
0025	Spring clip DN 32
0026	Threaded part 1 x 1¼
0027	Gasket A 27 x 39 x 2 mm
0028	Hose 1¼ with bend
0029	CB pressure switch 31.2 bar (3.12 MPa)
0030	Coil, 4-way diverter valve
0031	Refrigerant line, 4-way diverter valve – condenser
0032	Refrigerant line, compressor
0033	Condenser flow
0034	Flow
0035	Condenser return
0036	Refrigerant line, suction line — compressor
0037	Hot gas line
0038	Refrigerant line, evaporator — compressor
0039	Refrigerant line, pressure compensation
0040	Refrigerant line, solenoid valve
0041	Refrigerant line, condenser — refrigerant receiver
0042	Refrigerant line
0043	Tee
0044	Refrigerant line, filter dryer — tee
0045	Refrigerant line, refrigerant receiver — evaporator

Heat pump module (cont.)

Pos.	Part
0046	Refrigerant line, evaporator
0047	DN 18/DN 25 expansion joint
0048	Hose 1¼ with bend
0049	Refrigerant line, refrigerant receiver — filter dryer
0050	Tension clip 12 mm
0052	Gasket 8 x 50 x 5 mm
0053	Return connection set
0054	Flow connection set
0055	Thermal insulation, return
0056	Thermal insulation, flow
0057	Connector 22 x 16 mm
0058	Connector 22 x 15 mm
0059	Refrigerant line, intermediate injection
0060	Flow switch
0061	Flow switch VKS32, external
0062	Compressor sight glass

Heat pump module (cont.)

Base frame

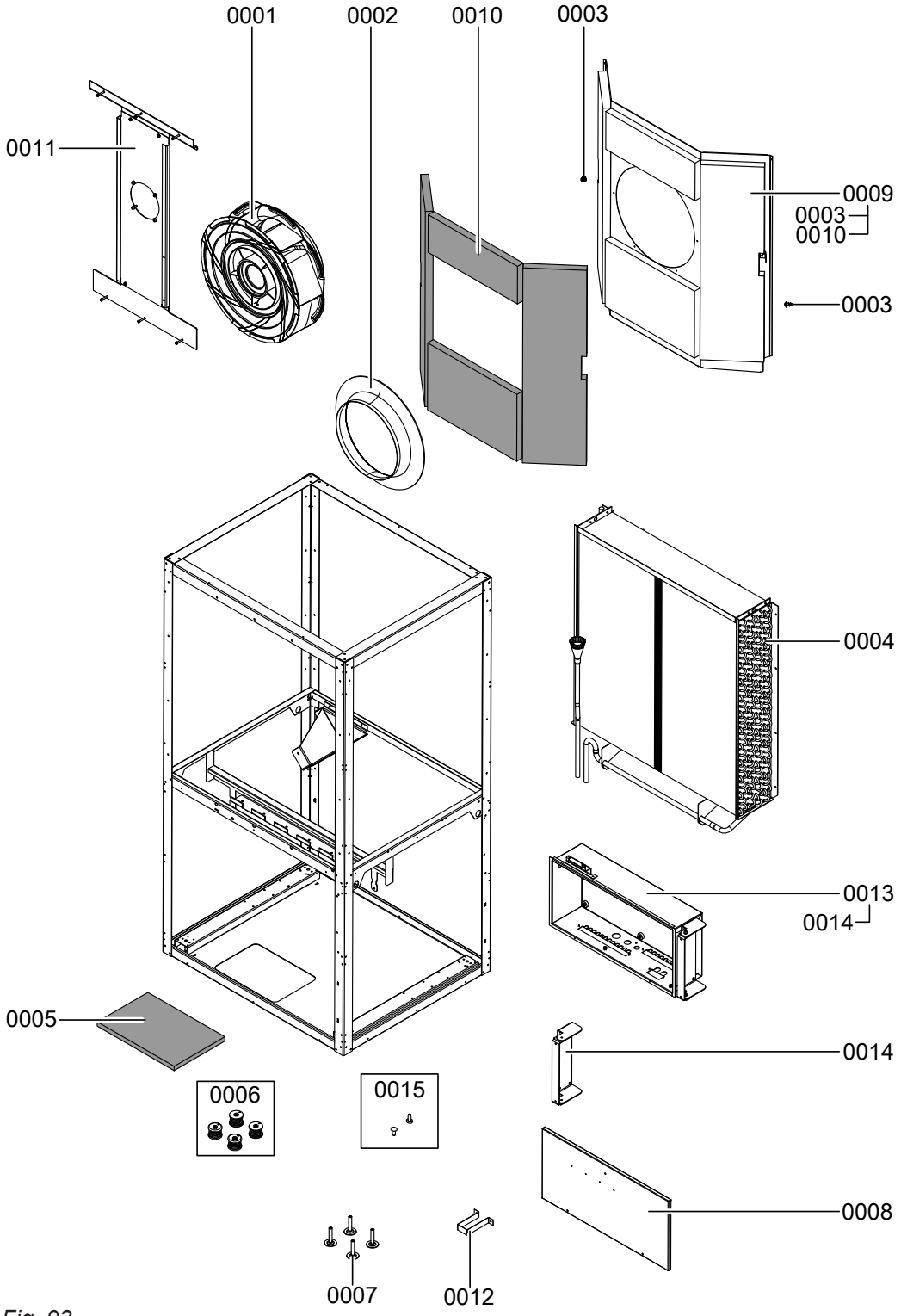

Fig. 93

Base frame (cont.)

Pos.	Part
0001	Radial fan
0002	Inlet ring for radial fan
0003	EPP connecting screw
0004	Evaporator
0005	Sound insulation mat base plate
0006	Anti-vibration mounts (set)
0007	Adjustable foot (set)
0008	Cover, control panel
0009	Inlet ring mounting plate (set)
0010	Sound insulation mats (set)
0011	Mounting plate (set)
0012	Mounting brackets (set)
0013	Control panel
0014	Hinge
0015	Fixing kit

Hydraulic parameter report

Settings and test values		Set value	Commissioning	Maintenance/ service
Checking external heating circuit pumps				
Circulation pump type				
Circulation pump stage				
Overflow valve setting				
Commissioning, primary circuit				
Air intake temperature (**"Diagnosis" → "System overview"**)	°C			
Air discharge temperature (**"Diagnosis" → "System overview"**)	°C			
Temperature differential (air intake/ discharge) ΔT:				
▪ At secondary circuit flow temperature = 35 °C and air intake temperature ≤ 15 °C	K	4 to 8		
▪ At secondary circuit flow temperature = 35 °C and air intake temperature > 15 °C	K	4 to 13		
Checking mixer, heat pump and cylinder heating Checked under the following conditions:				
Room temperature	°C			
Outside temperature	°C			
Temperature **"Cylinder temp. top"** constant?		Yes (±1 K)		
Secondary circuit flow temperature	°C	Rising	From To	From To
Temperature differential ΔT **"Flow temp. secondary"** / **"Return temp. sec."**	K	6 to 8		

Control parameter report

Parameter description
"Vitotronic 200" heat pump control unit service instructions

System definition

Parameter	Code	Factory setting	Commission-ing
System scheme (see chapter "System scheme")	7000	2	
Temperature differential for calculating the heating limit	7003	40 (≙ 4 K)	
Swimming pool	7008	0	
External extension	7010	0	
Cascade control	700A	0	
Number of lag heat pumps in cascade	5735	0	
Output lag heat pump	700B	10 kW	
Use of heat pump in cascade	700C	0	
System components for external changeover	7011	0	

Control parameter report (cont.)

Parameter	Code	Factory setting	Commissioning
Operating status for external changeover	7012	2	
Effect of external blocking on pumps/compressor	701A	0	
Duration of external changeover	7013	8 h	
Effect of external demand on heat pump/heating circuits	7014	4	
Effect of ext. blocking on heat pump/heating circuits	7015	4	
Vitocom 100	7017	0	
Effect of external blocking on pumps/compressor	701A	0	
Common system flow temperature sensor	701B	1	

Compressor

Parameter	Code	Factory setting	Commissioning
Enable compressor	5000	1	
Evaporator temperature for defrost end	5010	200 (≙ 20 °C	
Output compressor stage	5030	Rated heating output according to type plate	

External heat source

Parameter	Code	Factory setting	Commissioning
Enable external heat source	7B00	0	
Priority ext. heat source/instant. heating water heater	7B01	1	
Dual mode temperature external heat source	7B02	100 (≙ 10 °C)	
Enable external heat source for DHW heating	7B0D	0	

DHW

Parameter	Code	Factory setting	Commissioning
Set DHW temperature	6000	500 (≙ 50 °C)	
Min. DHW temperature	6005	100 (≙ 10 °C)	
Max. DHW temperature	6006	600 (≙ 60 °C)	
Hysteresis DHW temperature heat pump	6007	70 (≙ 7 K)	
Hysteresis DHW temperature booster heater	6008	100 (≙ 10 K)	
Start optimisation for DHW heating	6009	0	
Stop optimisation for DHW heating	600A	0	
Set DHW temperature 2	600C	600 (≙ 60 °C)	
Temperature sensor at bottom of DHW cylinder	600E	0	
Enable booster heaters for DHW heating	6014	0	
Enable electric heaters for DHW heating	6015	1	
Priority DHW heating with combi cylinder	6016	0	
Start attempts for DHW after high pressure shutdown	6017	1	
Operating mode cylinder primary pump	6020	Do not adjust.	

Solar

Parameter	Code	Factory setting	Commissioning
Type solar control unit	7A00	0	

Control parameter report (cont.)

Electric booster heater

Parameter	Code	Factory setting	Commission-ing
Enable instantaneous heating water heater	7900	0	
Enable instant. heating water heater for central heating	7902	1	
Max. output instantaneous heating water heater	7907	3	
Output for instant. heating water heater at power-OFF	790A	0	
Dual mode temp. instant. heating water heater	790B	100 (≙ 10 °C)	

Internal hydraulics

Parameter	Code	Factory setting	Commission-ing
Heat pump for drying a building	7300	0	
Time program for screed drying	7303	0	
Set flow temperature for external demand	730C	500 (≙ 50 °C)	
Enable 3-way diverter valve heating/DHW	730D	0	
Operating mode secondary pump	7340	Do not adjust.	

Heating water buffer cylinder

Parameter	Code	Factory setting	Commission-ing
Enable buffer cylinder/low loss header	7200	0	
Temp. in operating status fixed value for buffer cyl	7202	500 (≙ 50 °C)	
Hysteresis temperature heating buffer cylinder	7203	50 (≙ 5 K)	
Max. temperature buffer cylinder	7204	600 (≙ 60 °C)	
Temp. limit op. status fixed value for buffer cylinder	7208	100 (≙ 10 °C)	

Heating circuit 1

Parameter	Code	Factory setting	Commission-ing
Standard room temperature	2000	200 (≙ 20 °C)	
Reduced room temperature	2001	160 (≙ 16 °C)	
Remote control	2003	0	
Heating curve level	2006	0 (≙ 0 K)	
Heating curve slope	2007	6 (≙ 0.6)	
Influence room temperature hook-up	200A	10	
Room temperature hook-up	200B	3	
Max. flow temperature heating circuit	200E	400 (≙ 40 °C)	
Room temperature in party mode	2022	200 (≙ 20 °C)	

Heating circuit 2

Parameter	Code	Factory setting	Commission-ing
Standard room temperature	3000	200 (≙ 20 °C)	
Reduced room temperature	3001	200 (≙ 20 °C)	
Remote control	3003	0	
Heating curve level	3006	0 (≙ 0 K)	
Heating curve slope	3007	6 (≙ 0.6)	

Control parameter report (cont.)

Parameter	Code	Factory setting	Commission-ing
Influence room temperature hook-up	300A	10	
Room temperature hook-up	300B	3	
Max. flow temperature heating circuit	300E	400 (≙ 40 °C)	
Room temperature in party mode	3022	160 (≙ 16 °C)	

Heating circuit 3

Parameter	Code	Factory setting	Commission-ing
Standard room temperature	4000	200 (≙ 20 °C)	
Reduced room temperature	4001	200 (≙ 20 °C)	
Remote control	4003	0	
Heating curve level	4006	0 (≙ 0 K)	
Heating curve slope	4007	6 (≙ 0.6)	
Influence room temperature hook-up	400A	10	
Room temperature hook-up	400B	3	
Max. flow temperature heating circuit	400E	400 (≙ 40 °C)	
Room temperature in party mode	4022	160 (≙ 16 °C)	

Time

Parameter	Code	Factory setting	Commission-ing
Automatic changeover summertime - wintertime	7C00	1	
Start summertime - month	7C01	3	
Start summertime - week	7C02	5	
Start summertime - day	7C03	7	
Start wintertime - month	7C04	10	
Start wintertime - week	7C05	5	
Start wintertime - day	7C06	7	

Communication

Parameter	Code	Factory setting	Commission-ing
Heat pump number in cascade	5707	1	
Enable LON communication module	7710	0	
LON subscriber number	7777	1	
LON fault manager	7779	0	
Outside temperature	7797	0	
LON system number	7798	1	
Interval for data transfer via LON	779C	20 min	
Time via LON	77FF	0	

Operation

Parameter	Code	Factory setting	Commission-ing
Lock out controls	8800	0	

Specification

Heat pumps installed indoors

Type		AWHI 351.A10	AWHI 351.A14	AWHI 351.A20
Heating performance data to EN 14511 (A2/W35)				
▪ For secondary circuit flow rate	l/h	2400	3300	3700
▪ For pressure drop	mbar	200	370	450
	kPa	20	37	45
Rated heating output	kW	10.60	14.50	18.50
Electrical power consumption	kW	2.9	4.2	5.8
Coefficient of performance ε (COP)		3.60	3.50	3.20
Heating performance data to EN 14511 (A7/W35, 5 K spread)				
Rated heating output	kW	12.70	16.70	20.60
Power consumption	kW	3.1	4.2	6.1
Coefficient of performance ε (COP)		4.00	3.80	3.40
Heat yield				
Max. fan rating	W	110	170	270
Max. air volume	m^3/h	3500	4000	4500
Max. permissible pressure drop (on ventilation air and extract air side)	Pa	37	45	61
Min. air intake temperature	°C	–20	–20	–20
Max. air intake temperature	°C	35	35	35
Defrost as proportion of runtime	%	2 to 5	2 to 5	2 to 5
Heating water (secondary circuit)				
Content	l	5.0	5.5	6.0
Minimum flow rate	l/h	1100	1450	1700
Condenser pressure drop (with connection pipes, standard delivery)	mbar	50	90	120
	kPa	5.0	9.0	12.0
Max. flow temperature (at 5 K spread)				
▪ At air intake temperature –20 °C	°C	55	55	55
▪ At air intake temperature –10 °C	°C	65	65	65
Electrical values, heat pump				
Rated voltage		3/N/PE 400 V/50 Hz		
Max. rated current	A	10	14	18.3
Starting current (with electronic starting current limiter)	A	23	26	30
Starting current (with stalled armature)	A	64	101	99
Fuse protection		3 x B16A	3 x B20A	3 x B25A
Fan protection		6.3 A H (slow)	6.3 A H (slow)	6.3 A H (slow)
Control circuit rated voltage		1/N/PE 230 V/50 Hz		
Control circuit protection		6.3 A H (slow)	6.3 A H (slow)	6.3 A H (slow)
Refrigerant circuit				
Refrigerant		R407C	R407C	R407C
▪ Refrigerant charge	kg	4.0	4.5	5.2
▪ Global warming potential (GWP)		1774	1774	1774
▪ CO_2 equivalent	t	7.1	8.0	9.2
Compressor	Type	Hermetically sealed scroll compressor with injection		
▪ Oil in compressor	Type	Emkarate RL 32 3MAF		
▪ Quantity of oil in compressor	l	1.9	1.9	4.0

5692878

Specification (cont.)

Type		AWHI 351.A10	AWHI 351.A14	AWHI 351.A20
Dimensions				
Total length	mm	946	946	946
Total width	mm	880	1030	1200
Total height	mm	1870	1870	1870
Total weight	kg	287	297	361
Permiss. operating pressure	bar	3	3	3
	MPa	0.3	0.3	0.3
Connections				
Heating flow and return (female thread)	G	1½	1½	1½
Condensate hose (Ø internal/external)	mm	25/32	25/32	25/32
Energy efficiency class according to EU Regulation no. 813/2013				
Heating, average climatic conditions				
▪ Low temperature applications (W35)		A^{++}	A^{+}	A^{+}
▪ Medium temperature applications (W55)		A^{+}	A^{+}	A^{+}

Heat pumps installed outdoors

Type		AWHO 351.A10	AWHO 351.A14	AWHO 351.A20
Heating performance data to EN 14511 (A2/W35)				
▪ For secondary circuit flow rate	l/h	2400	3300	3700
▪ For pressure drop	mbar	200	370	450
	kPa	20	37	45
Rated heating output	kW	10.60	14.50	18.50
Electrical power consumption	kW	2.9	4.2	5.8
Coefficient of performance ε (COP)		3.60	3.50	3.20
Heating performance data to EN 14511 (A7/W35, 5 K spread)				
Rated heating output	kW	12.70	16.70	20.60
Power consumption	kW	3.1	4.2	6.1
Coefficient of performance ε (COP)		4.00	3.80	3.40
Heat yield				
Max. fan rating	W	110	170	270
Max. air volume	m^3/h	3500	4000	4500
Max. permissible pressure drop (on ventilation air and extract air side)	Pa	–	–	–
Min. air intake temperature	°C	–20	–20	–20
Max. air intake temperature	°C	35	35	35
Defrost as proportion of runtime	%	2 to 5	2 to 5	2 to 5
Heating water (secondary circuit)				
Content	l	5.0	5.5	6.0
Minimum flow rate	l/h	1100	1450	1700
Condenser pressure drop (with connection pipes, standard delivery)	mbar	50	90	120
	kPa	5.0	9.0	12.0
Max. flow temperature (at 5 K spread)				
▪ At air intake temperature –20 °C	°C	55	55	55
▪ At air intake temperature –10 °C	°C	65	65	65

Specification (cont.)

Type		AWHO 351.A10	AWHO 351.A14	AWHO 351.A20
Electrical values, heat pump				
Rated voltage		3/N/PE 400 V/50 Hz		
Max. rated current	A	10	14	18.3
Starting current (with electronic starting current limiter)	A	23	26	30
Starting current (with stalled armature)	A	64	101	99
Fuse protection		3 x B16A	3 x B20A	3 x B25A
Fan protection		6.3 A H (slow)	6.3 A H (slow)	6.3 A H (slow)
IP rating		IPX4	IPX4	IPX4
Control circuit rated voltage		1/N/PE 230 V/50 Hz		
Control circuit protection		6.3 A H (slow)	6.3 A H (slow)	6.3 A H (slow)
Refrigerant circuit				
Refrigerant		R407C	R407C	R407C
▪ Refrigerant charge	kg	4.0	4.5	5.2
▪ Global warming potential (GWP)		1774	1774	1774
▪ CO_2 equivalent	t	7.1	8.0	9.2
Compressor	Type	Hermetically sealed scroll compressor with injection		
▪ Oil in compressor	Type	Emkarate RL 32 3MAF		
▪ Quantity of oil in compressor	l	1.9	1.9	4.0
Dimensions				
Total length	mm	1265	1265	1265
Total width	mm	1380	1530	1700
Total height	mm	1885	1885	1885
Total weight	kg	325	335	400
Permiss. operating pressure	bar	3	3	3
	MPa	0.3	0.3	0.3
Connections				
Heating flow and return (female thread)	G	1¼	1¼	1½
Condensate hose (Ø internal/external)	mm	25/32	25/32	25/32
Energy efficiency class according to EU Regulation no. 813/2013				
Heating, average climatic conditions				
▪ Low temperature applications (W35)		A^{++}	A^{+}	A^{+}
▪ Medium temperature applications (W55)		A^{+}	A^{+}	A^{+}

Sound transmission data

Type AWHI 351.A (heat pumps installed indoors, 400 V appliances)

Type		AWHI 351.A10	AWHI 351.A14	AWHI 351.A20
Sound power level L_W				
A-weighted total sound power level in heating mode at A7 $^{\pm 3\,K}$/W35 $^{\pm 1\,K}$, corner installation				
Inside installation room				
▪ Fan stage 1	dB(A)	48	49	55
▪ Fan stage 2 (= night mode)	dB(A)	48	49	56
▪ Fan stage 3	dB(A)	48	50	57
External, intake side				
▪ Fan stage 1	dB(A)	45	48	54
▪ Fan stage 2 (= night mode)	dB(A)	46	48	56
▪ Fan stage 3	dB(A)	49	53	56
External, discharge side				
▪ Fan stage 1	dB(A)	39	45	51
▪ Fan stage 2 (= night mode)	dB(A)	43	48	54
▪ Fan stage 3	dB(A)	48	52	54

Type AWHO 351.A (heat pumps installed outdoors, 400 V appliances)

Type		AWHO 351.A10	AWHO 351.A14	AWHO 351.A20
Sound power level L_W				
A-weighted total sound power level in heating mode at A7 $^{\pm 3\,K}$/W35 $^{\pm 1\,K}$				
▪ Fan stage 1	dB(A)	54	56	61
▪ Fan stage 2 (= night mode)	dB(A)	54	57	63
▪ Fan stage 3	dB(A)	56	59	63

Note
Test of the total sound power level with reference to EN ISO 12102/EN ISO 9614-2, accuracy category 2 and in accordance with the guidelines of the EHPA quality seal

Heat pump commissioning order

Please send the following order, together with the enclosed system scheme, by fax to your local Viessmann sales office.
We would ask that a competent employee of yours be present during commissioning.

System details:

Client _____

_____

System location _____

_____

_____

Please tick these check points:

- ☐ Hydraulic scheme for system example included:
  - ☐ System example 1
  - ☐ System example 2
  - ☐ Sketch for alternative hydraulic scheme
- ☐ Heating circuits fully installed and filled
- ☐ Electrical installation completed
- ☐ Hydraulic lines fully thermally insulated
- ☐ All windows and external doors sealed
- ☐ Components for cooling mode fully installed (optional)

Preferred appointment:

1. Date _____
   Time _____
2. Date _____
   Time _____

All work ordered from Viessmann will be charged to me/us in accordance with the current Viessmann pricelist.

Place/date _____

Signature _____

Declaration of conformity

Vitocal 350-A, type:
AWHI-M
AWHO-M
Including the Vitotronic 200, type WO1B heat pump control unit

We, Viessmann Werke GmbH & Co. KG, D-35107 Allendorf, declare as sole responsible body that the named product complies with the provisions of the following directives and regulations.

2014/68/EU	Pressure Equipment Directive
2014/30/EU	EMC Directive
2014/35/EU	Low Voltage Directive
2011/65/EU	RoHS II
2009/125/EC	Ecodesign Directive
2010/30/EU	Directive for energy consumption labelling
811/2013	EU Regulation "Energy Efficiency Label"
813/2013	EU Regulation "Energy Efficiency Requirements"

Details according to the Pressure Equipment Directive (2014/68/EU): Category I, module A

Applied standards:

DIN 8901:2002-12
DIN 8975-1:1986-12
EN 349:2008
EN 378:2012
EN 50090-2-2:2007-11
EN 55014-1:2011
EN 55014-2:2009
EN 55022:2010
EN 60335-1:2002+A11+A1+A12+A2+A13+A14:2010
EN 60335-2-40:2003+A11+A12+A1+Corrigendum +A2:2009
EN 61000-3-2:2014
EN 61000-3-3:2013
EN 61000-3-11:2001-04
EN 61000-3-12:2005-09
EN 62233:2008
EN 62233 Corrigendum 1:2009-04
ISO 12100:2010
EN ISO 13857:2008
BGR 500, chapter 2.35

In accordance with the listed directives and regulations, this product is designated with CE.

Allendorf, 06/12/2017

Viessmann Werke GmbH & Co. KG

Authorised signatory Reiner Jansen
Head of Strategic Quality Management

The **product characteristics** determined as system values for the product **Vitocal 350-A** (see technical guide) can be utilised to assess the energy consumption of heating and ventilation systems to DIN V 4701-10 specified by the EnEV [Germany].

Keyword index

A
Antifreeze.....19
Appliance connector.....10, 11
Appliance fuse.....81

B
Buffer temperature sensor..... 13

C
Cable, power supply.....19
Cables
– Applying strain relief.....42
– Inserting..... 39
Cables/leads..... 13, 18
Cascade
– Control method.....78
– Number of lag heat pumps.....78
– Use of heat pump.....78, 79
Central fault message..... 51, 77
Circulation pump for cylinder heating.....20
Cleaning, interior.....71
Coding card.....34, 45
Coding level 1..... 73
Coefficient of performance (COP).....132, 133
Commissioning.....68, 73, 136
Commissioning assistant..... 73
Commissioning order..... 136
Compressor casing temperature check..... 72
Concrete foundation.....18
Condensate.....14
Condensate drain.....12, 15, 16, 17, 18
Condenser pressure drop..... 132, 133
Connecting cables.....19
Connections..... 133, 134
– Electrical.....18
– Hydraulic..... 18
– Type AWHI 351.A.....12, 17
Connection values
– Circulation pumps..... 49
– Function components.....49
– Operational components.....47
Control cable..... 18, 19
Controller and sensor PCB..... 45
Control panel.....34, 38, 43
Control parameter reports.....128
Control PCB..... 54
Control unit.....39
– Controller and sensor PCB..... 54
– Expansion PCB.....49
Cylinder temperature sensor.....13, 20

D
DHW circulation pump..... 13, 20
Dimensions..... 133, 134
– AWHI 351.A.....9
– AWHO 351.A.....14
Drain & fill facility.....19
Drain and air vent valves
– Overview..... 80
Drain facility.....18, 19

E
Electrical cables..... 18
Electrical connection..... 34, 39
– General information.....8
Electrical connections
– Checking.....72
– Circulation pumps..... 49
– Controller and sensor PCB..... 54
– Expansion PCB.....49
Electrical power consumption..... 132, 133
Electric booster heater.....77
Electric cables/leads..... 15, 16, 18
Electricity meter.....13, 20
Enable external extension.....78
Expansion PCB.....49
Expansion vessel..... 18
Expansion vessel, checking.....71
Extended menu.....74
Extension kit for heating circuit with mixer..... 76
External blocking.....77
External changeover.....77
External demand.....77
External extension H1.....78
External heat generator.....77
External starting..... 77

F
Fill & drain facility..... 18
Fill water.....70
Flow temperature for external demand..... 78, 79
Flow temperature sensor, secondary circuit.....33
Foundations..... 14
Frost protection..... 19
Fuse
– Checking.....81
Fuse protection..... 132, 134

H
Heating circuit pump..... 20
Heating water buffer cylinder bypass.....48
Heating water flow.....12, 17
Heating water return.....12, 17
Heat pump
– Cleaning.....71
Heat pump, draining.....80
Heat pump control unit.....19
– Fitting..... 39
– Open..... 41
Hydraulic connection lines..... 18
Hydraulic connection set.....15, 16, 18
Hydraulic lines.....18
Hydraulic parameters.....128

I
Immersion heater..... 52, 78
Inspection.....68
Installation requirements.....13
Installation room.....8
Instantaneous heating water heater.....20, 77
Intended use..... 6

5692878

Keyword index (cont.)

Interior cleaning....71
Internal components....80
IP rating....134
Isolators....58

K
KG conduit.... 19

L
Laying electrical cables.... 18
Laying hydraulic lines....18
Leak test....64
Line entry.... 19
LV cable....18
LV lead.... 19

M
Mains fuse....58
Mains isolator....68
Maintenance....68
Max. air intake temperature.... 132, 133
Max. air volume....132, 133
Max. fan rating.... 132, 133
Max. flow temperature....132, 133
Max. lead length....18
Max. permissible pressure drop.... 132, 133
Max. rated current....132, 134
Maximum temperature limiter....48
Min. air intake temperature.... 132, 133
Min. flow rate....132, 133
Minimum clearances.... 9
– AWHO 351.A....14
Minimum room height....10
Mixer extension kit.... 49

N
Noise....64

O
ON/OFF switch....73
Operational components....49
Output lag heat pump....78, 79
Outside temperature sensor....13, 20
Overvoltage....63

P
Panel....39
Parameter group selection....74
Parameters
– Cascade via H1....78
– Cascade via LON....78
– Electric booster heater....77
– External functions....77
– External heat generator....77
– Immersion heater....78
– Instantaneous heating water heater....77
– On-site components....75
– Pumps....75
– Report.... 128
– Swimming pool water heating....78
Parameter setting....74
Partition wall.... 10, 11
Parts list
– AWHO 351.A....105
Parts lists
– AWHI 351.A....83
Performance data, heating....132, 133
Permiss. operating pressure.... 133, 134
Phase asymmetry.... 63
Phase monitor....62
– Version 1....63
– Version 2....63
– Version 3....64
Positioning
– AWHI 351.A....9
– AWHO 351.A....14
Power cable.... 18, 19, 58
– Instantaneous heating water heater....13
Power cuts.... 58
Power failure.... 19
Power-OFF....60
Power-OFF signal.... 58
Power supply....19, 58, 62
– Compressor....58
– Heat pump control unit....59
– Regulations....58
Power supply utility.... 19
Pressure, checking....71
Product information....7
Pumps....75

R
Rated heating output....132, 133
Rated voltage....132, 134
Refrigerant.... 132, 134
Refrigerant charge.... 132, 134
Refrigerant circuit....132, 134
– Checking for leaks....69
Remote control....76
Repair work....68
Reports....128
– Control parameters.... 128
Residual current device (RCD).... 58
Room height....8

S
Safety assembly....18
Safety chain.... 63
Seal rings, replacing....64, 71
Secondary pump....13, 20
Sensor PCB.... 54
Sensor resistance curves....80
Sensors....80
– Checking.... 80
Service menu
– Activating....74
– Calling up.... 74
– Deactivating.... 74
Service termination.... 74
Sound power level, total....135

5692878

Sound transmission data.....135
Specification.....132
Starting current.....132, 134
Swimming pool.....55
Switching module, instantaneous heating water heater.....20
Symbols..... 6
System examples.....7
System pressure, checking.....71
System scheme.....78
– Options (table).....75

T
Technical connection requirements.....58
Temperature limiter..... 48
Three-phase monitor.....62
Tightness test.....71
Top-up water..... 70
Total sound power level.....135
Total weight..... 133, 134

U
Underfloor heating.....48
Underfloor heating circuit..... 48
Undervoltage.....63
Use.....6
Use of heat pump in a cascade.....78, 79

V
VDE regulations..... 58
Vitocom..... 76

W
Wall clearances
– AWHO 351.A.....14
Wall duct.....10, 11, 18, 19
Wall ducts.....19
Wall openings..... 10, 11
Warranty.....73
Water quality..... 70
Wiring diagram.....20

Viessmann Werke GmbH & Co. KG
D-35107 Allendorf
Telephone: +49 6452 70-0
Fax: +49 6452 70-2780
www.viessmann.com

Viessmann Limited
Hortonwood 30, Telford
Shropshire, TF1 7YP, GB
Telephone: +44 1952 675000
Fax: +44 1952 675040
E-mail: info-uk@viessmann.com

5692878 Subject to technical modifications.